SUZUKI
MARINE

Parts Book

DT50 80~82

DT65 80~82

A - 4

PREFACE

When it becomes necessary to replace parts on SUZUKI OUTBOARD MOTORS, always use SUZUKI GENUINE PARTS which have passed a strict inspection which guarantees quality and performance.

This parts catalogue covers the list of all service parts for SUZUKI DT50 (G,J,VZ,TVZ), DT50M (G,J,VZ), DT50W (J,VZ), DT65 (G,J,VZ,TVZ).

A. INSTRUCTIONS FOR QUOTING THE CATALOGUE

1. DIMENSIONS

Dimensions of the parts in this catalogue are indicated in unit millimeters.

2. ABBREVIATIONS

Abbreviations used in this catalogue are as follows:

AR	:	As required	NT	:	Number of teeth
ASSY	:	Assembly	OPT	:	Optional
E.No.	:	Engine Number	OS	:	Over Size
F.No.	:	Frame Number	STD	:	Standard
d	:	Diameter of material	T	:	Thickness
ID	:	Inside diameter	US	:	Under size
OD	:	Outside diameter	W	:	Width
L	:	Length	LHD	:	Left handle drive
LH	:	Left hand side	RHD	:	Right handle drive
RH	:	Right hand side	S,L,UL,LL	:	Transom type
~123456	:	Up to E.No.5001-123456			
123456~	:	From E.No.5001-123456			

12 x 34 x 5.6 ·····Figures in the description column show the dimensions of parts.
ID OD T(or W,L)

The number of letter shown below Q'ty indicate the MODEL NAME as shown below.

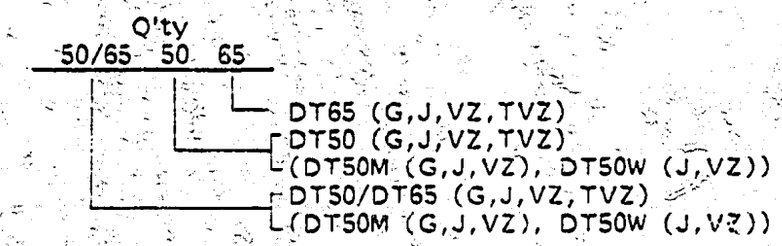

3. INNER PARTS OF ASSEMBLY

Parts number that have a period (.) mark in front of the part description on a text page are separately serviced parts of the assembly.

4. MODIFICATION NOTICE

A parts bulletin will be sent to you on all accasions when changes in parts occur, including interchangeable modifications between new parts and old ones.

5. NOTE

5-1. There are some different parts from those of production models among spare parts for the administrative reasons and common use of them with other models.

5-2. In respect of rubber hoses and vinyl tubes, please be sure to use them by cutting off according to the length mentioned on parts catalogue or what is actually required on the vehicle.

5-3. Note that the drawings on the illustration page are for ready reference of spare parts number, not to be used as an assembly manual.
When assembling, use "SUZUKI SERVICE MANUAL".

6. SPECIFICATION CODE

This catalogue contains the parts for the model designed for the following spec.;

spec. code: DT50G (E1, E3, E9, E13, E28)
DT50MG (E1, E3, E9, E13, E28)
DT50J (E1, E3, E28), DT50WJ (E9, E13)
DT50MJ (E3, E9, E13, E28)
DT50VZ (E1, E7, E28), DT50WVZ (E13, E40)
DT50MVZ (E1, E7, E13, E28, E40), DT50TVZ E1
DT65G (E1, E3, E9, E13, E28)
DT65J (E1, E3, E9, E13, E28)
DT65VZ (E7, E13, E28, E40), DT65TVZ E1

7. SERIAL ENGINE NUMBER

DT50G	: 5001-001001~	DT50MG	: 5002-001001~
DT50J	: 5001-1xxxxx~	DT50MJ	: 5002-1xxxxx~
DT50(T)VZ	: 5001-2xxxxx~	DT50MVZ	: 5002-2xxxxx~
		DT50WJ	: 5002-1xxxxx~
		DT50WVZ	: 5002-2xxxxx~
DT65G	: 6501-001001~		
DT65J	: 6501-1xxxxx~		
DT65(T)VZ	: 6501-2xxxxx~		

FIG.1

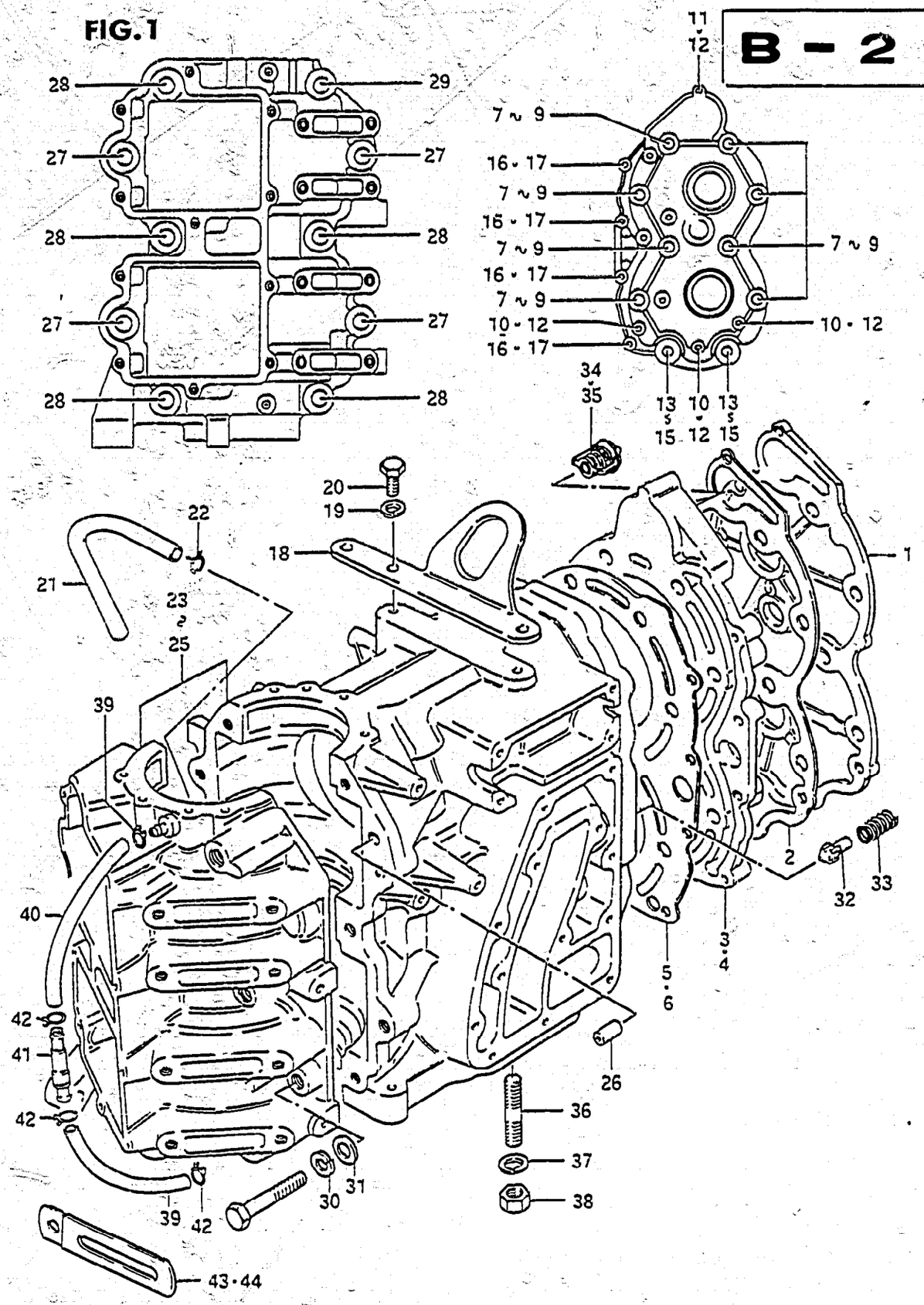

DT50, DT65

FIG.1 CYLINDER

Ref. No.	Part No.	Description	Q'ty 50	Q'ty 65	Remarks
1-1	11161-95200-01J	COVER, cylinder head	1	1	to 11161-95201-01J
1-2	11161-95201-01J	COVER, cylinder head	1	1	
2	11162-95200	GASKET, cylinder head cover	1	1	
3	11111-95204-01J	CYLINDER HEAD	1	-	
4-1	11111-95302-01J	CYLINDER HEAD	-	1	model G
4-2	11111-95310-01J	CYLINDER HEAD	-	1	model J/VZ
5-1	11141-95202	GASKET, cylinder head	1	-	
5-2	11141-95203	GASKET, cylinder head	1	-	from 11141-95202
5-3	11141-95204	GASKET, cylinder head	1	-	
6-1	11141-95301	GASKET, cylinder head	-	1	
6-2	11141-95302	GASKET, cylinder head	-	1	from 11141-95301
6-3	11141-95303	GASKET, cylinder head	-	1	
7-1	01107-10808	BOLT	8	8	
7-2	01907-10808	BOLT	8	8	model VZ
8	08321-21108	LOCK WASHER	8	8	
9	08322-11108	WASHER	8	8	
10-1	01107-06258	BOLT	3	3	
10-2	01907-06258	BOLT	3	3	
11-1	01107-06308	BOLT	1	1	
11-2	01107-06308	BOLT	1	1	
12	08321-21068	LOCK WASHER	4	4	
13	09119-10016	BOLT	2	2	
14	08321-21108	LOCK WASHER	2	2	
15	08322-11108	WASHER	2	2	
16-1	01107-06358	BOLT	4	4	
16-2	01907-06358	BOLT	4	4	model VZ
17	08321-21068	LOCK WASHER	4	4	
18	11291-95202-01J	HOOK, engine	1	1	
19-1	08321-21088	LOCK WASHER	2	2	
19-2	08321-21088	LOCK WASHER	1	-	DT50M
20-1	01107-08208	BOLT	2	2	
20-2	01907-08208	BOLT	2	2	
20-3	01907-08208	BOLT	1	-	DT50M
21	09343-03051	HOSE, inspection	1	1	L:235→180
22	09401-06403	CLIP	2	2	

DT50, DT65

FIG.1

B - 3

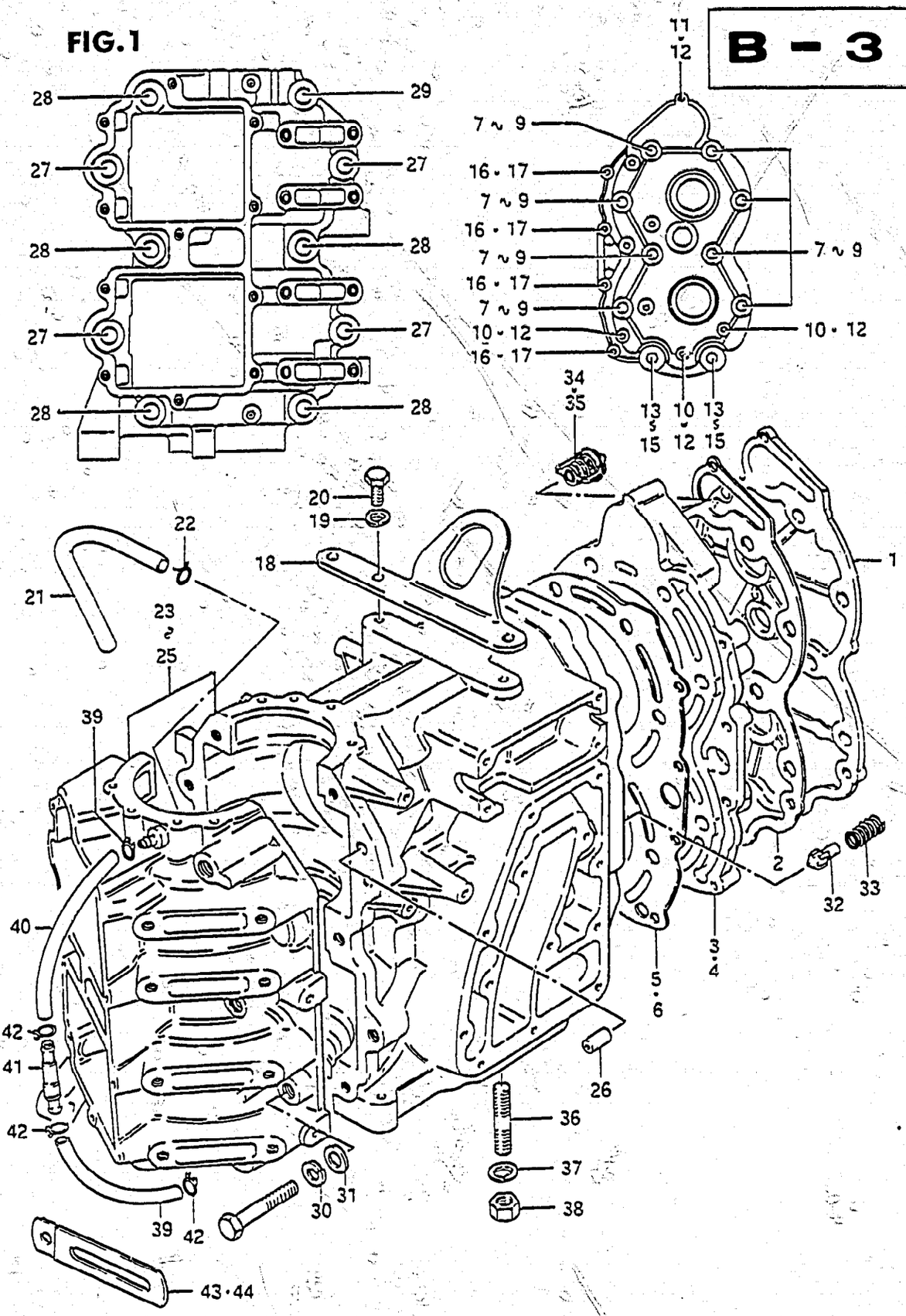

FIG.1 CYLINDER

Ref. No.	Part No.	Description	Q'ty 50	Q'ty 65	Remarks
23-1	11301-95200-01J	CYLINDER/CRANKCASE ASSY to 11301-95201-01J	1	-	model G from 11300-95200-01J
23-2	11301-95201-01J	CYLINDER/CRANKCASE ASSY	1	-	
23-3	11301-95202-01J	CYLINDER/CRANKCASE ASSY	1	-	
23-4	11301-95203-01J	CYLINDER/CRANKCASE ASSY	1	-	model VZ from 11301-95202-01J
24-1	11301-95300-01J	CYLINDER/CRANKCASE ASSY to 11301-95301-01J	-	1	model G from 11300-95300-01J
24-2	11301-95301-01J	CYLINDER/CRANKCASE ASSY	-	1	
24-3	11301-95302-01J	CYLINDER/CRANKCASE ASSY	-	1	
24-4	11301-95303-01J	CYLINDER/CRANKCASE ASSY	-	1	model VZ from 11301-95302-01J
25-1	11301-95210-01J	CYLINDER/CRANKCASE ASSY to 11301-95211-01J	1	-	DT50MG(E1,E3,E9, E13,E28) from 11300-95210-01J
25-2	11301-95211-01J	CYLINDER/CRANKCASE ASSY	1	-	DT50MJ(E3,E9,E13,E28)
25-3	11301-95212-01J	CYLINDER/CRANKCASE ASSY	1	-	
25-4	11301-95213-01J	CYLINDER/CRANKCASE ASSY	1	-	DT50MVZ(E1,E7,E13, E28,E40) from 11301-95212-01J
26	04211-09109	·DOWEL PIN	2	2	
27-1	01107-10358	·BOLT	4	4	
27-2	01907-10358	·BOLT	4	4	model VZ
28-1	01107-10508	·BOLT	5	5	
28-2	01907-10508	·BOLT	5	5	
29-1	01107-10658	·BOLT	1	1	
29-2	01907-10658	·BOLT	1	1	
30	08321-21108	·LOCK WASHER	10	10	
31	08322-11108	·WASHER	10	10	
32	17611-95201	VALVE, water by-pass	1	1	
33	09440-11008	SPRING	1	1	
34	17670-95500	THERMOSTAT (42°C)	1	1	
35	17670-95290	THERMOSTAT (62°C)	1	1	OPT
36	09108-08029	STUD BOLT, engine holder	1	1	8x40
37	09162-08003	LOCK WASHER	1	1	
38	09140-08003	NUT	1	1	

DT50, DT65

FIG.1

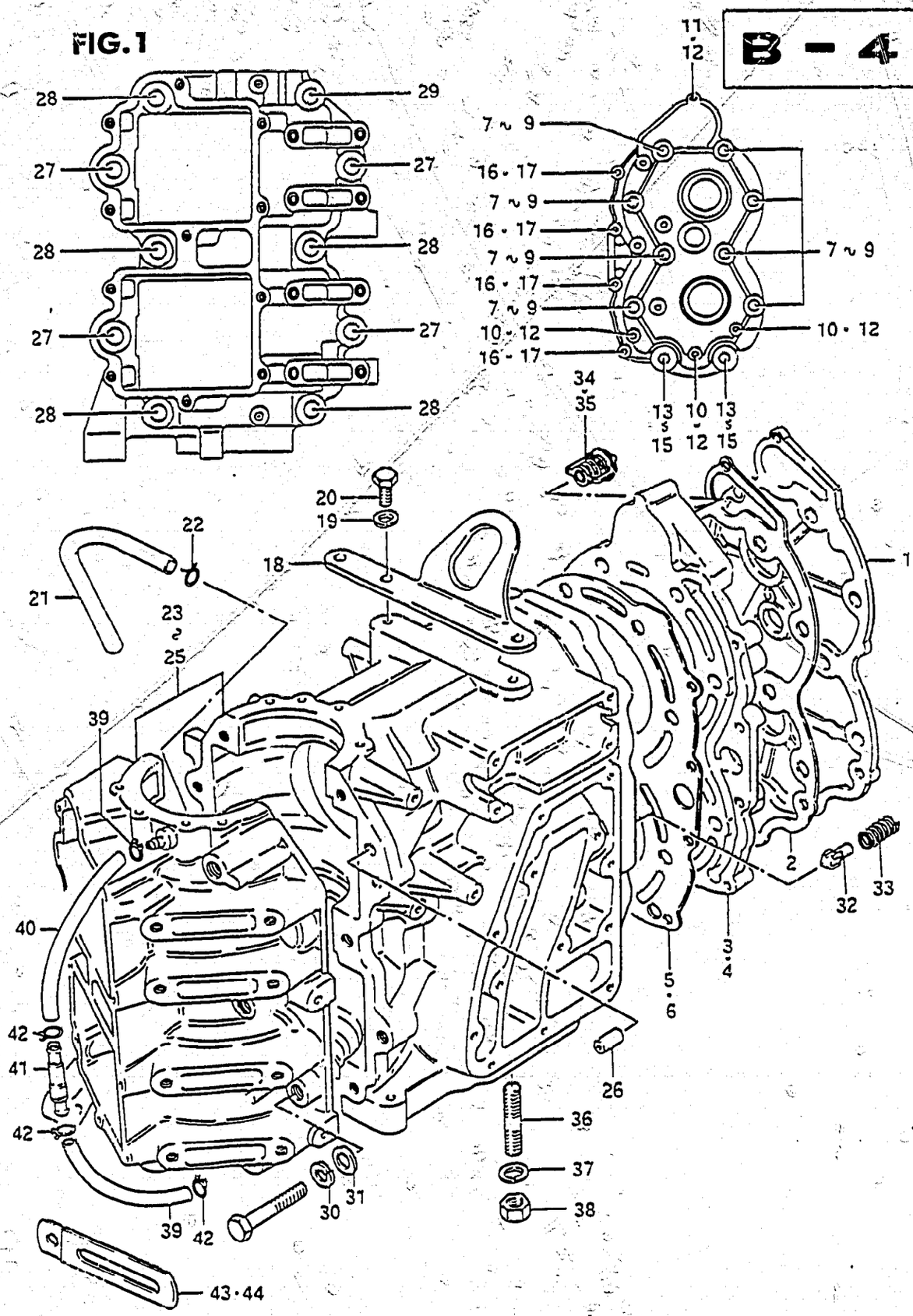

3

FIG.1 CYLINDER

Ref. No.	Part No.	Description	Q'ty 50	Q'ty 65	Remarks
39	09343-03016	HOSE, lubrication (L:235→120)	1	1	
40	09343-03016	HOSE, lubrication (L:235→180)	1	1	
41	16710-95200	CHECK VALVE	1	1	
42	09401-06403	CLIP	4	4	
43	09404-06413	CLAMP, lubrication hose	1	1	
44	09404-08413	CLAMP	1	-	DT50MG(E1,E9,E13), DT50MJ(E3,E9,E13,E28) DT50MVZ(E1,E7,E13, E28,E40)

DT50, DT65

FIG.2

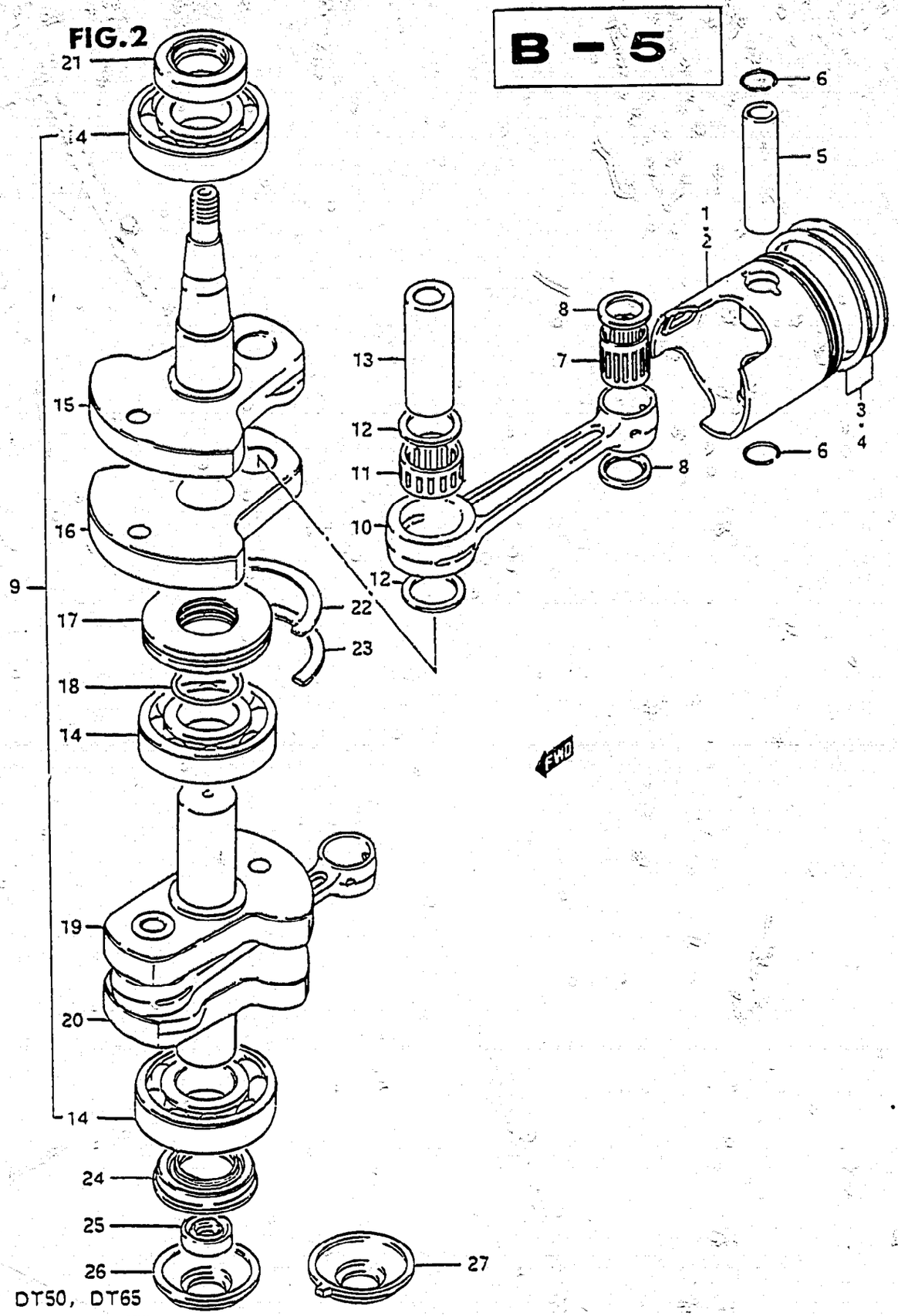

DT50, DT65

FIG.2 CRANKSHAFT

Ref. No.	Part No.	Description	Q'ty 50	Q'ty 65	Remarks
1-1	12110-95202	PISTON (STD)	2	-	
1-2	12110-95202-025	PISTON (OS:0.25)	2	-	OPT
1-3	12110-95202-050	PISTON (OS:0.5)	2	-	OPT
2-1	12110-95501	PISTON (STD)	-	2	
2-2	12110-95501-025	PISTON (OS:0.25)	-	2	OPT
2-3	12110-95501-050	PISTON (OS:0.5)	-	2	OPT
3-1	12140-95211	RING SET, piston (STD)	2	-	
3-2	12140-95211-025	RING SET, piston (OS:0.25)	2	-	OPT
3-3	12140-95211-050	RING SET, piston (OS:0.5)	2	-	OPT
4-1	12140-95301	RING SET, piston (STD)	-	2	
4-2	12140-95301-025	RING SET, piston (OS:0.25)	-	2	OPT
4-3	12140-95301-050	RING SET, piston (OS:0.5)	-	2	OPT
5	12151-16502	PIN, piston	2	2	
6	09381-20001	CIRCLIP, piston pin	4	4	
7	09263-20034	BEARING, piston pin	2	2	20x25x27.9
8	09169-20001	WASHER, connecting rod	4	4	
9-1	12200-95828	CRANKSHAFT ASSY	1	1	model G
9-2	12200-95212	CRANKSHAFT ASSY	1	1	model J/VZ from 12200-95828
10	12161-95200	·ROD, connecting	2	2	
11	09263-26007	·BEARING, crank pin	2	2	26x34x20
12	09160-26007	·WASHER (26x33x2)	4	4	
13	12211-95202	·PIN, crank	2	2	

FIG.2

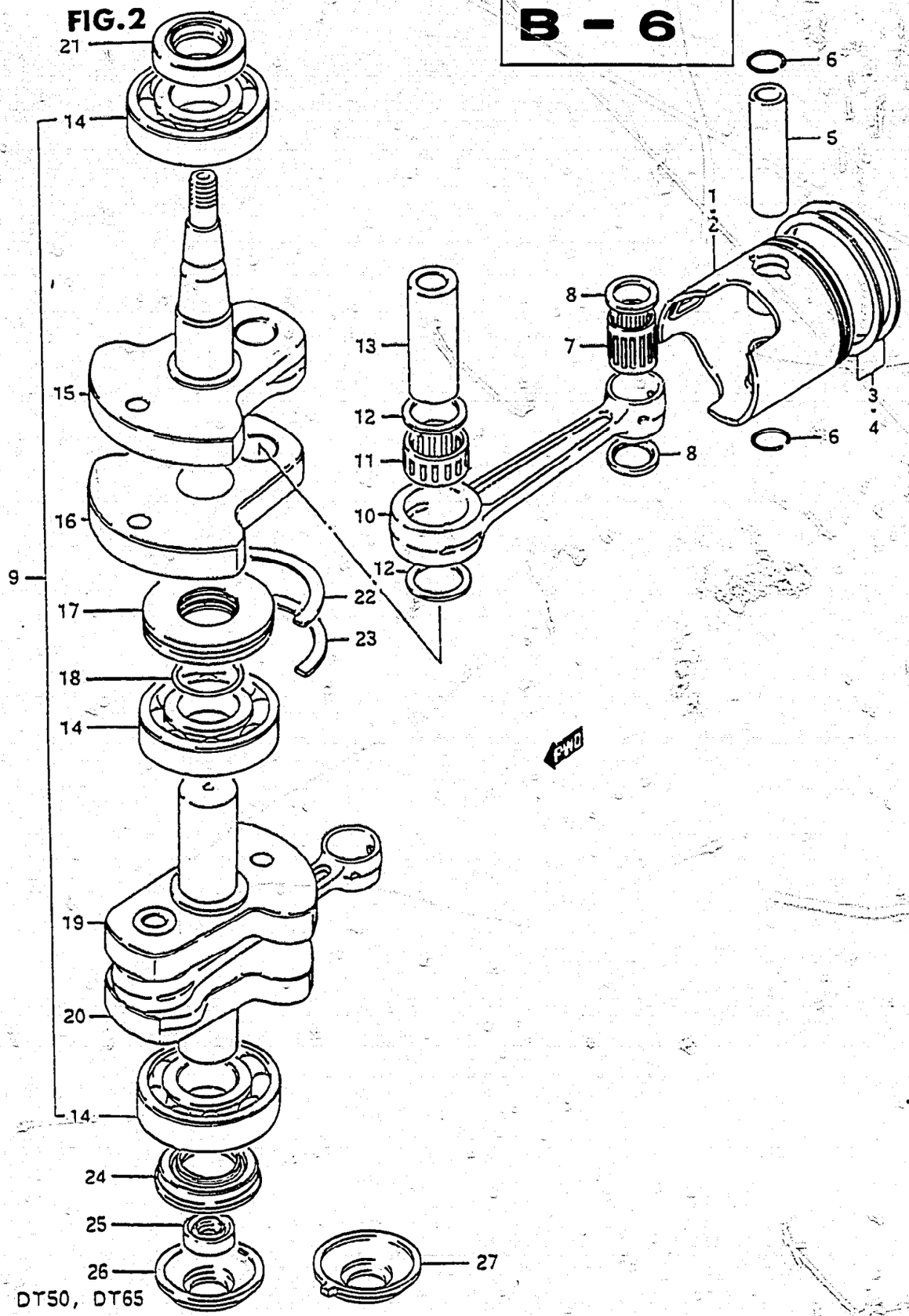

DT50, DT65

FIG.2 CRANKSHAFT

Ref. No.	Part No.	Description	Q'ty 50	Q'ty 65	Remarks
14	09262-30049	•BEARING, crankshaft	3	3	30x72x19
15	12221-95203	•CRANKSHAFT, upper	1	1	
16	12232-95202	•WHEEL, middle lower	1	1	
17	12321-95204	•SEAL, labyrinth	1	1	
18	09280-63001	•O RING	1	1	
19	12231-95202	•WHEEL, middle upper	1	1	
20	12240-95201	•CRANKSHAFT, lower	1	1	
21	09283-30011	OIL SEAL, upper crankshaft	1	1	30x55x10
22	09390-72006	RING, seal labyrinth	1	1	
23	09390-72005	RING, thrust	1	1	
24	09289-30004	OIL SEAL, lower crankshaft	1	1	30x55x10
25	09282-17004	OIL SEAL, drive shaft upper	1	1	17x28x6
26	11431-95200	HOUSING, lower oil seal	1	1	model G
27	11431-95201	HOUSING, lower oil seal	1	1	model J/VZ

DT50, DT65

FIG.3

B - 7

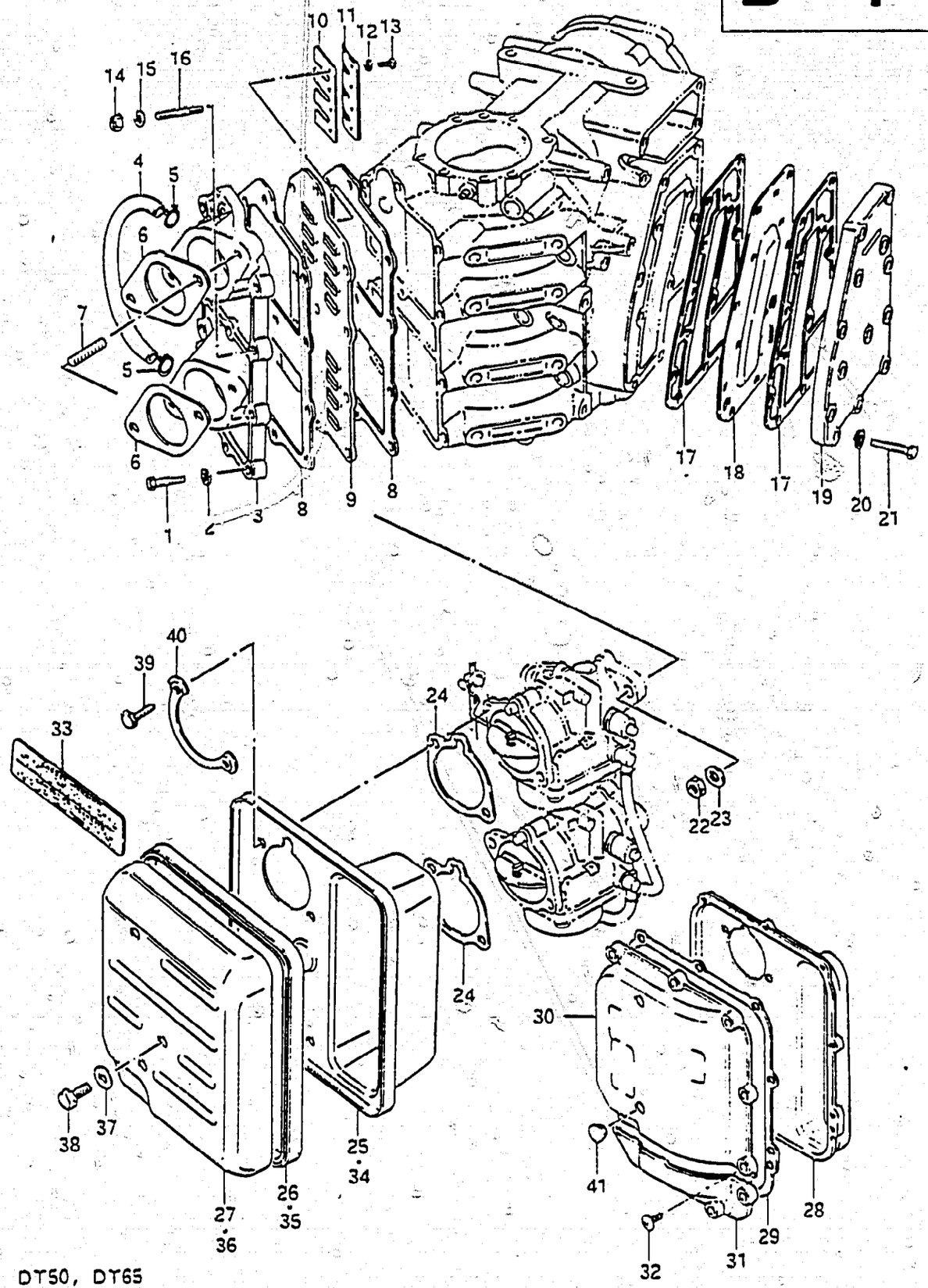

DT50, DT65

FIG.3 INLET CASE / EXHAUST COVER

Ref. No.	Part No.	Description	Q'ty 50	Q'ty 65	Remarks
1-1	01107-06308	BOLT	9	9	
1-2	01907-06308	BOLT	9	9	model VZ
2	08321-21068	LOCK WASHER	9	9	
3	13110-95210-01J	CASE, inlet	1	1	
4	09343-05137	HOSE, inlet case (L:500→165) (L:500→150)	1	1	model G model J/VZ
5	09401-09402	CLIP, inlet hose	2	2	
6	13125-95200	GASKET, carburetor	2	2	
7	01411-08208	STUD BOLT	2	2	
8	13121-95200	GASKET, inlet case	2	2	
9	13150-95201	VALVE ASSY, reed	1	1	
10	13153-95200	·VALVE, reed	4	4	
11	13152-95201	·STOPPER, reed valve	4	4	
12	08321-21038	·LOCK WASHER	16	16	
13	02112-03068	·SCREW	16	16	
14	08310-11068	NUT	2	2	
15	08321-21068	LOCK WASHER	2	2	
16	01421-06258	STUD BOLT	2	2	
17	14151-95200	GASKET, exhaust cover	2	2	
18	14131-95200	PLATE, exhaust cover	1	1	
19	14141-95200-01J	COVER, exhaust	1	1	
20	08321-21068	LOCK WASHER	13	13	
21-1	01107-06308	BOLT	13	13	
21-2	01907-06308	BOLT	13	13	model VZ
22	08310-22088	NUT	4	4	
23	08322-11088	WASHER	4	4	
24	13855-95200	GASKET, silencer	2	2	

DT50, DT65

FIG.3

B - 8

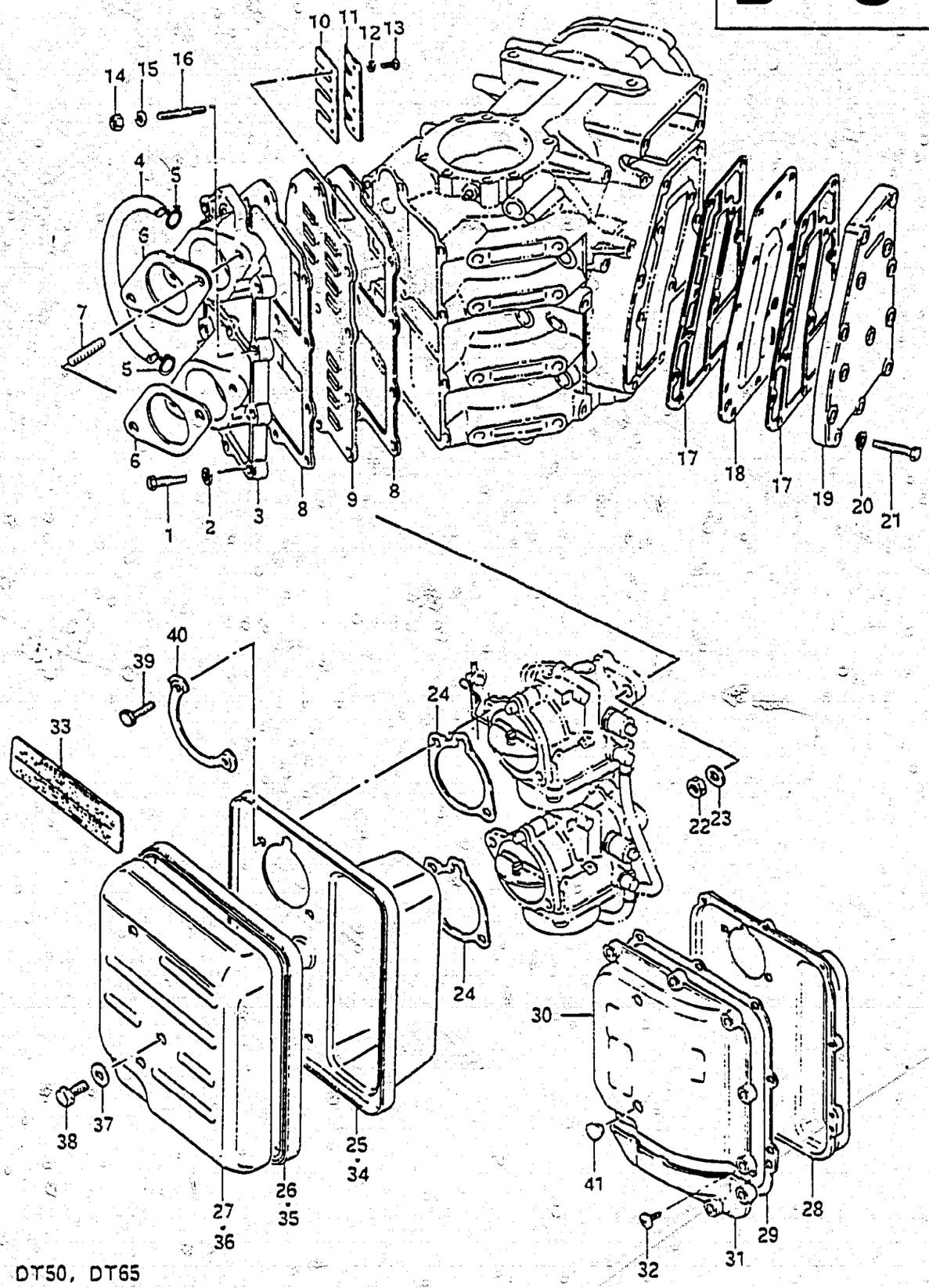

FIG.3 INLET CASE / EXHAUST COVER

Ref. No.	Part No.	Description	Q'ty 50	Q'ty 65	Remarks
25	13811-95201	CASE, silencer	1	1	model G/J
26	13851-95200	SEAL, silencer	1	1	
27	13812-95201	COVER, silencer	1	1	
28	13811-95300	CASE, silencer	1	1	model J/VZ
29	13853-95300	GASKET	1	1	
30	13812-95301	COVER, upper	1	1	
31	13814-95300	COVER, lower	1	1	
32	02152-05207	SCREW	12	12	
33	61458-95202	MARK, safety warning	1	1	
34	13811-95210-291	CASE, silencer	1	-	DT50MG(E1,E3,E9,E13, E28)
35	13851-95210	SEAL, silencer	1	-	
36	13812-95210	COVER, silencer	1	-	
37	09160-08028	WASHER (8.5x32x1.2)	2	2	model G/J
38	01107-08128	BOLT	1	1	
39-1	01107-06128	BOLT	4	4	
39-2	01907-06128	BOLT	4	4	model VZ
40	09169-06027	WASHER	2	2	model G/J
41	09250-10010	PLUG, cover	2	2	model J/VZ

DT50, DT65

FIG.4

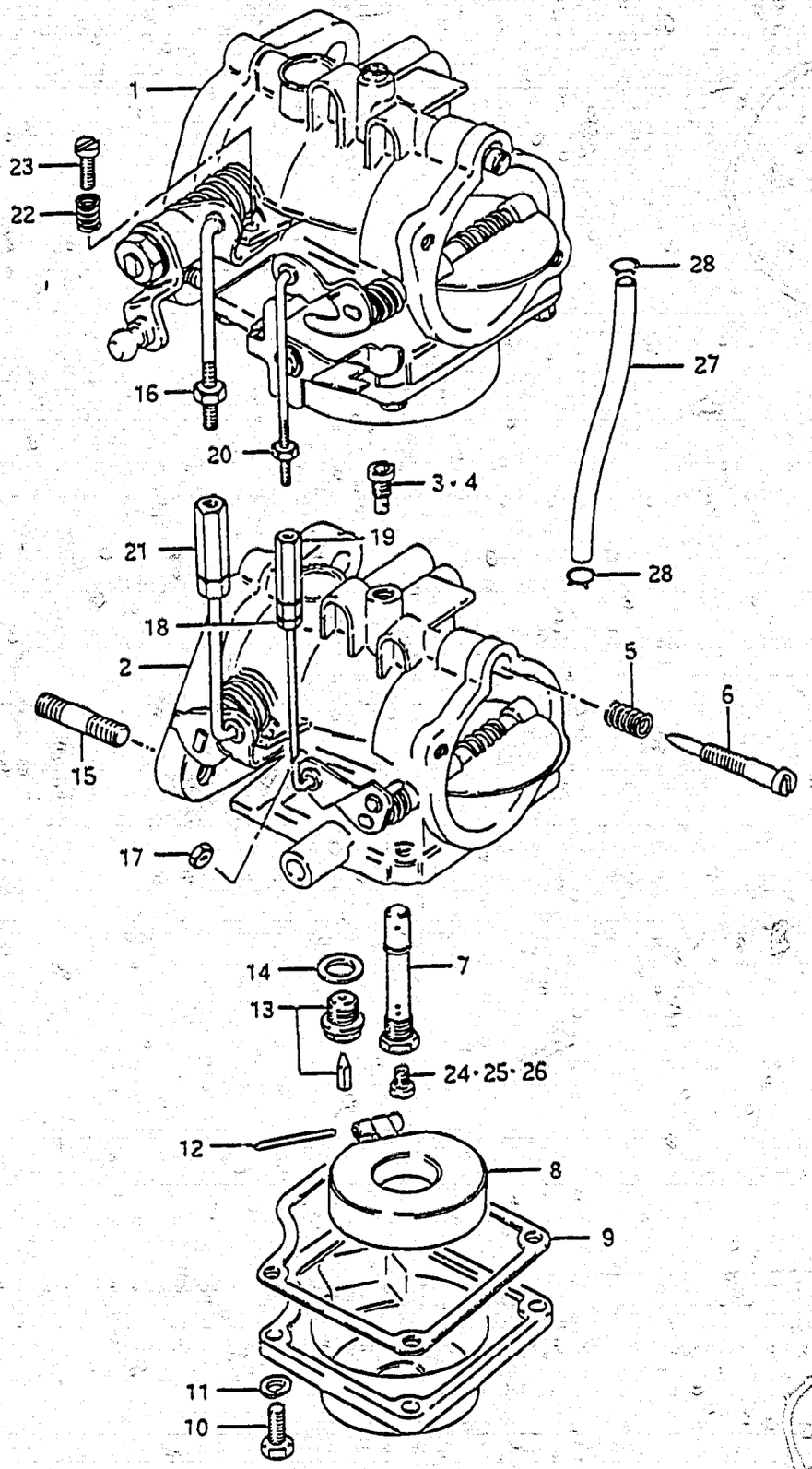

B - 9

FIG.4 CARBURETOR

Ref. No.	Part No.	Description	Q'ty 50	Q'ty 65	Remarks
1-1	13201-95303	CARBURETOR, top model G (stamp:95303) When DT50G····AIR SCREW TURNS BACK 2 1/2 → 2	1	1	DT50G→stamp:95204
1-2	13201-95205	CARBURETOR, top model J/VZ (STamp:95205)	1	-	
1-3	13201-95304	CARBURETOR, top model J/VZ (stamp:95304)	-	1	
2-1	13202-95303	CARBURETOR, 2nd model G (stamp:95303) When DT50G····AIR SCREW TURNS BACK 2 1/2 → 2	1	1	DT50G→stamp:95204
2-2	13202-95205	CARBURETOR, 2nd model J/VZ (stamp:95205)	1	-	
2-3	13202-95304	CARBURETOR, 2nd model J/VZ (stamp:95304)	-	1	
3	09492-85001	·JET, pilot (85)	2	2	for 13201-95303 13201-95205 13202-95303 13202-95205
4	09492-67002	·JET, pilot (67.5)	-	2	for 13201-95304 13202-95304
5	13271-93311	·SPRING, air screw	2	2	
6	13269-95210	·ADJUSTER	2	2	
7	13235-95210	·NOZZLE	2	2	
8	13250-93012	·FLOAT	2	2	
9	13251-95210	·GASKET	2	2	
10	13611-95211	·BOLT	8	8	
11	09162-05002	·LOCK WASHER	8	8	
12	13254-93010	·PIN, float	2	2	
13	13370-28110	·VALVE ASSY, needle	2	2	
14	13392-58600	·GASKET, valve seat	2	2	
15	01411-08208	·STUD BOLT	2	2	

FIG.5 (B-11) : DT50M

DT50, DT65

FIG.4

B - 10

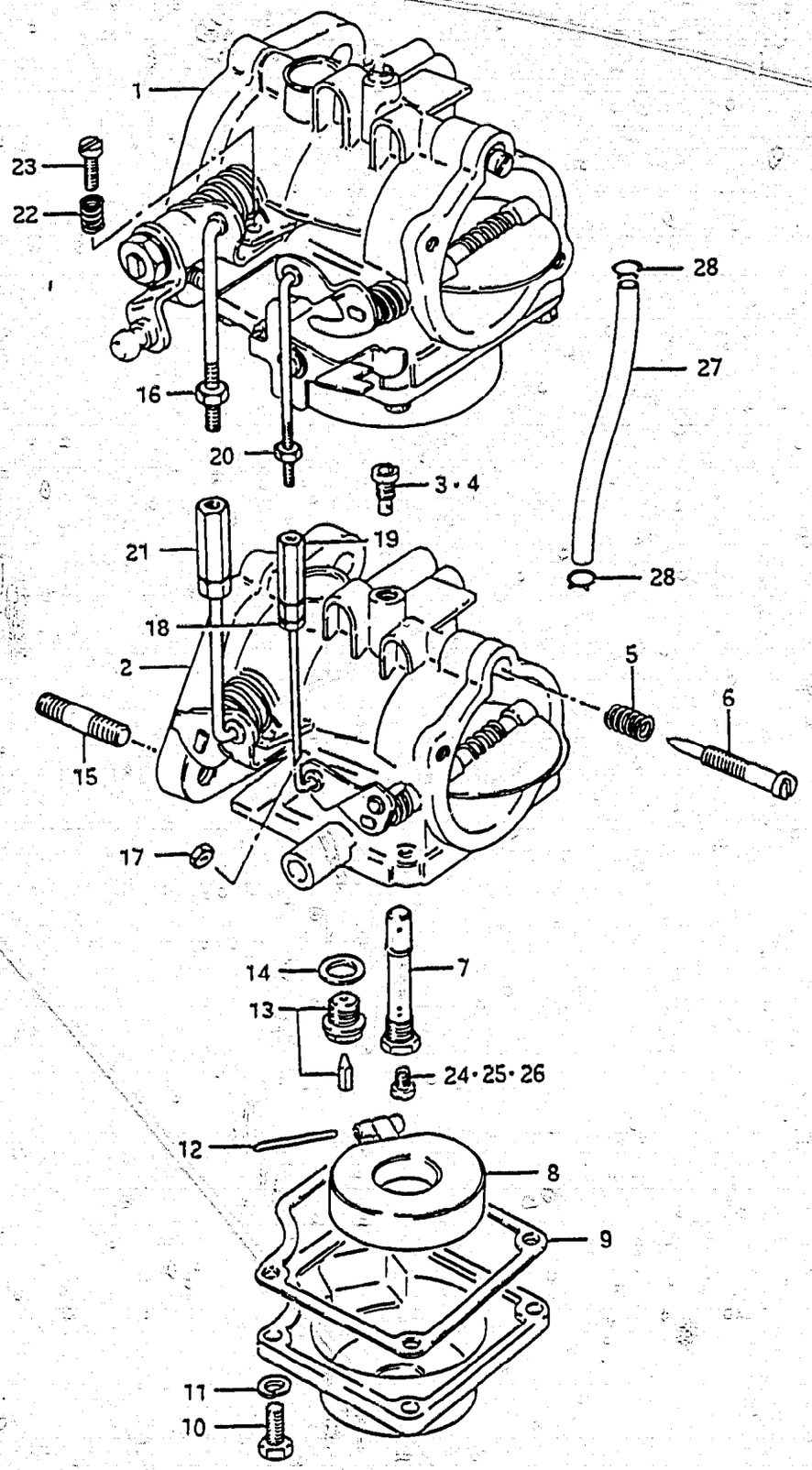

FIG.4 CARBURETOR

Ref. No.	Part No.	Description	Q'ty 50	Q'ty 65	Remarks
16	13582-95216	·NUT (Top carbu)	1	1	
17	13582-95216	·NUT (2nd carbu)	1	1	
18	13599-95212	·NUT (2nd carbu)	1	1	
19	13599-95211	·NUT (2nd carbu)	1	1	
20	13599-95210	·NUT (Top carbu)	1	1	
21	13582-95219	·NUT (2nd carbu)	1	1	
22	13268-96110	·SPRING, stop screw	2	2	
23	13267-95211	·SCREW, throttle stop	2	2	
24	09491-33001	·JET, main (165)	2	2	for 13201-95303 13201-95205 13202-95303 13202-95205
25	09491-33003	·JET, main (167.5)	-	2	for 13201-95304 13202-95304
26-1	09491-31003	JET, main (155)	2	2	OPT
26-2	09491-31007	JET, main (157.5)	-	2	
26-3	09491-32006	JET, main (160)	2	2	
26-4	09491-32008	JET, main (162.5)	-	2	
26-5	09491-34004	JET, main (170)	2	2	
26-6	09491-34006	JET, main (172.5)	-	2	
27	09343-05137	HOSE, fuel (carbu-carbu) (L:500-135)	1	1	
28	09401-09402	CLIP, fuel hose	2	2	

FIG.5 (B-11) : DT50M

FIG.5

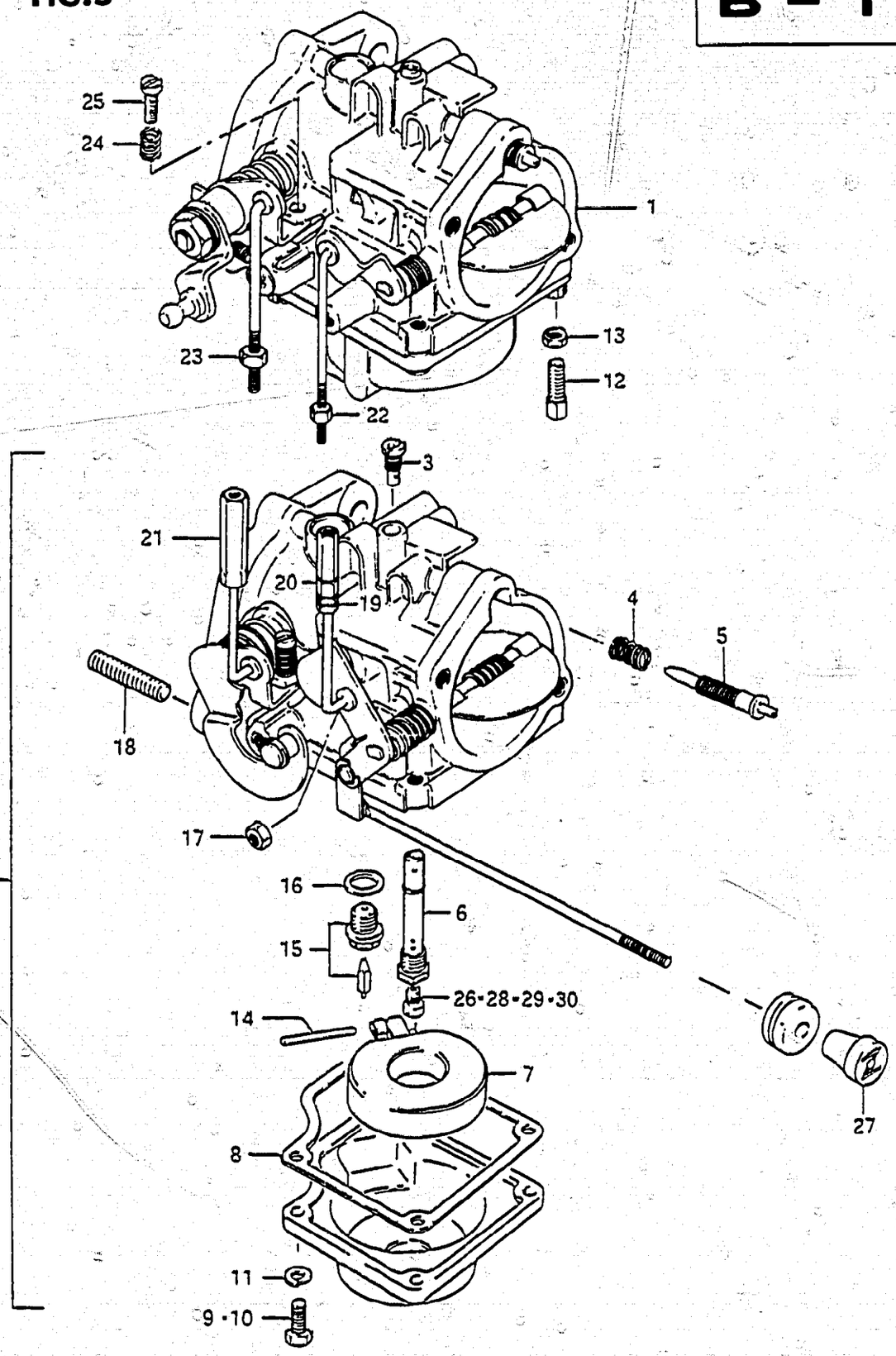

FIG.5 CARBURETOR (DT50M)

Ref. No.	Part No.	Description	Q'ty 50	Remarks
1-1	13201-95223	CARBURETOR, top DT50MG (E1,E3,E9,E13,E28)	1	stamp:95223
1-2	13201-95224	CARBURETOR, top DT50MJ (E3,E9,E13,E28) DT50MVZ (E1,E7,E13,E28,E40)	1	stamp:95224
2-1	13202-95223	CARBURETOR, 2nd DT50MG (E1,E3,E9,E13,E28)	1	stamp:95223
2-2	13202-95224	CARBURETOR, 2nd DT50MJ (E3,E9,E13,E28) DT50MVZ (E1,E7,E13,E28,E40)	1	stamp:95224
3	09492-85001	·JET, pilot (85)	2	
4	13271-93311	·SPRING, air screw	2	
5	13269-95210	·ADJUSTER	2	
6	13235-95210	·NOZZLE	2	
7	13250-93012	·FLOAT	2	
8	13251-95210	·GASKET	2	
9	13611-95211	·BOLT	6	
10	13611-95212	·BOLT	2	from 13611-95220
11	09162-05002	·LOCK WASHER	8	
12	13577-22600	·ADJUSTER, cable	2	
13	13661-03010	·NUT	1	
14	13254-93010	·PIN, float	2	
15	13370-28110	·NEEDLE VALVE	2	
16	13392-58600	·GASKET	2	
17	13582-95216	·NUT	1	
18	01411-08208	·STUD BOLT	2	
19	13599-95212	·NUT	1	
20	13599-95211	·NUT	1	
21	13582-95219	·NUT	1	
22	13599-95210	·NUT	1	
23	13582-95216	·NUT	1	
24	13268-96110	·SPRING	1	
25	13267-95211	·SCREW	1	
26	09491-33001	·JET, main (165)	2	
27	13631-93500	KNOB, starter	1	
28	09491-31003	JET, main (155)	2	OPT
29	09491-32006	JET, main (160)	2	OPT
30	09491-34004	JET, main (170)	2	OPT

FIG.4 (B-9, 10) : DT50, DT65

DT50, DT65

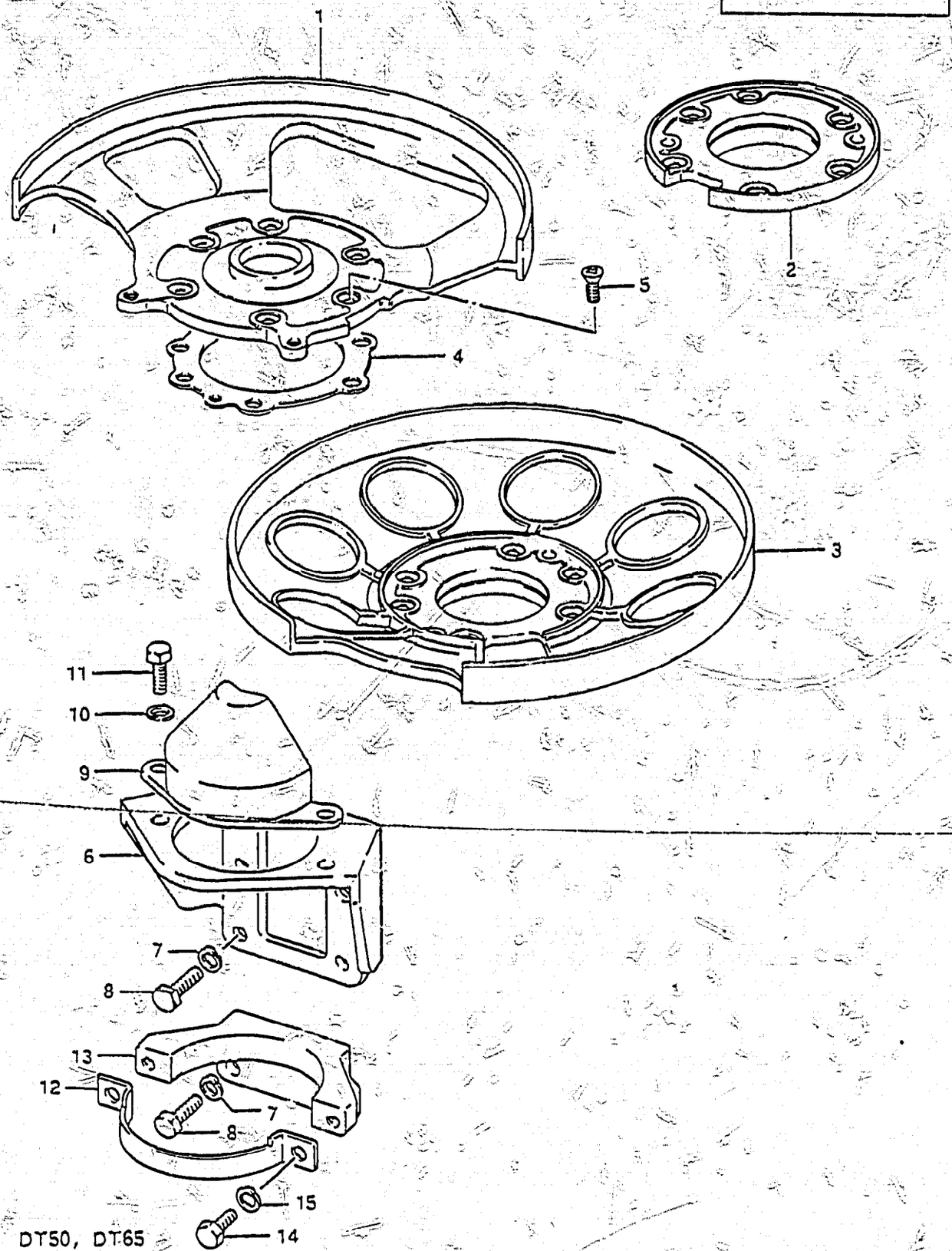

FIG.6 UPPER OIL SEAL HOUSING

Ref. No.	Part No.	Description	Q'ty 50	Q'ty 65	Remarks
1	11411-95301-01J	HOUSING, upper oil seal	1	1	
2	11411-95210-01J	HOUSING, upper oil seal	1	-	DT50MG(E1,E9,E13) DT50MJ(E3,E9,E13,E28) DT50MVZ(E1,E7,E13, E28,E40)
3	11411-95200-01J	HOUSING, upper oil seal	1	-	DT50MG E3,MG E28
4	11421-95200	GASKET, oil seal housing	1	1	
5	02122-06168	SCREW	6	6	
6	31911-95200-01J	BRACKET, motor upper	1	1	
7	08321-21088	LOCK WASHER	6	6	
8	01107-08258	BOLT	6	6	
9	31914-95201	COVER, starting motor	1	1	
10	08321-21088	LOCK WASHER	2	2	
11	01107-08258	BOLT	2	2	
12-1	31912-95200	BAND, starting motor	1	1	to 31912-94500
12-2	31912-94500	BAND, starting motor	1	1	
13	31913-95200-01J	BRACKET, motor lower	1	1	
14	01107-08168	BOLT	2	2	
15	08321-21088	LOCK WASHER	2	2	

FIG.7

C - 2

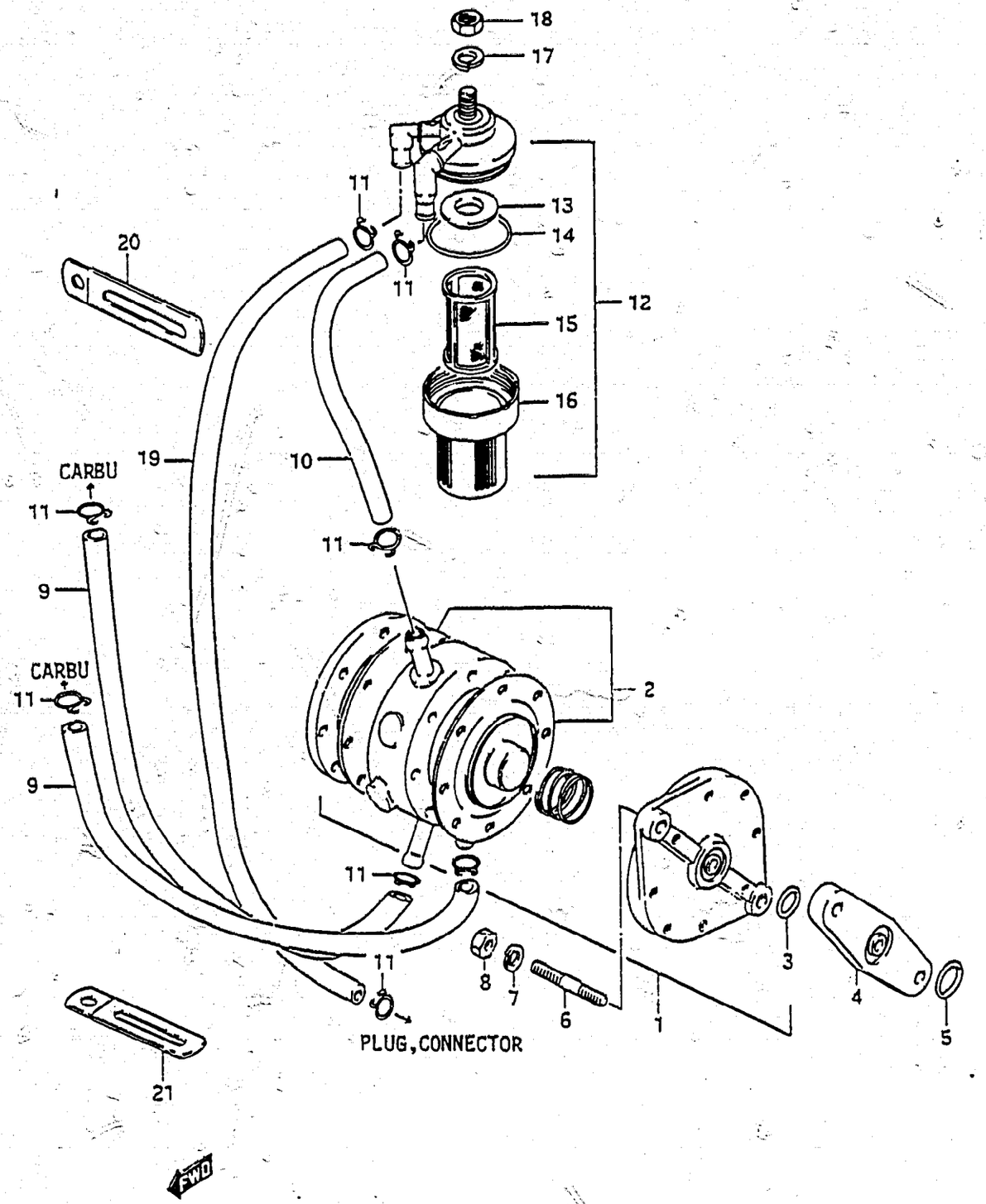

12

FIG.7 FUEL PUMP

Ref. No.	Part No.	Description	Q'ty 50/65	Remarks
1-1	15100-95201	PUMP ASSY, fuel	1	model G
1-2	15100-95202	PUMP ASSY, fuel	1	from 15100-95201
1-3	15100-95203	PUMP ASSY, fuel	1	from 15100-95202
2	15170-95500	·DIAPHRAGM SET	1	from 15170-95810
3	15165-93010	·O RING	1	
4	15322-93000	INSULATOR, fuel pump	1	
5	09280-12002	O RING (ID:11.8,d:2.4)	1	
6	01421-06258	STUD BOLT	2	
7	08321-21068	LOCK WASHER	2	
8	08310-11068	NUT	2	
9	09343-05137	HOSE, fuel (pump→carbu) (L:500→450)	1	
10-1	09343-05137	HOSE, fuel (filter→pump) (L:500→90)	1	model G
10-2	09343-05137	HOSE, fuel (filter→pump)	1	L:500→75, model J/VZ
11	09401-09402	CLIP, fuel hose	6	
12	15410-93400	FILTER ASSY, fuel	1	
13	15416-93400	·PACKING	1	
14	15415-93400	·O RING	1	
15	15412-93400	·STRAINER	1	
16	15413-93400	·CUP	1	
17	08321-21088	LOCK WASHER	1	
18	08310-22088	NUT	1	
19	09343-05137	HOSE, fuel (connector→filter) (L:500→450) (L:500→420)	1	model G model J/VZ
20	09404-06413	CLAMP (L:70)	1	
21	09404-06414	CLAMP (L:80)	1	

FIG. 8

C - 3

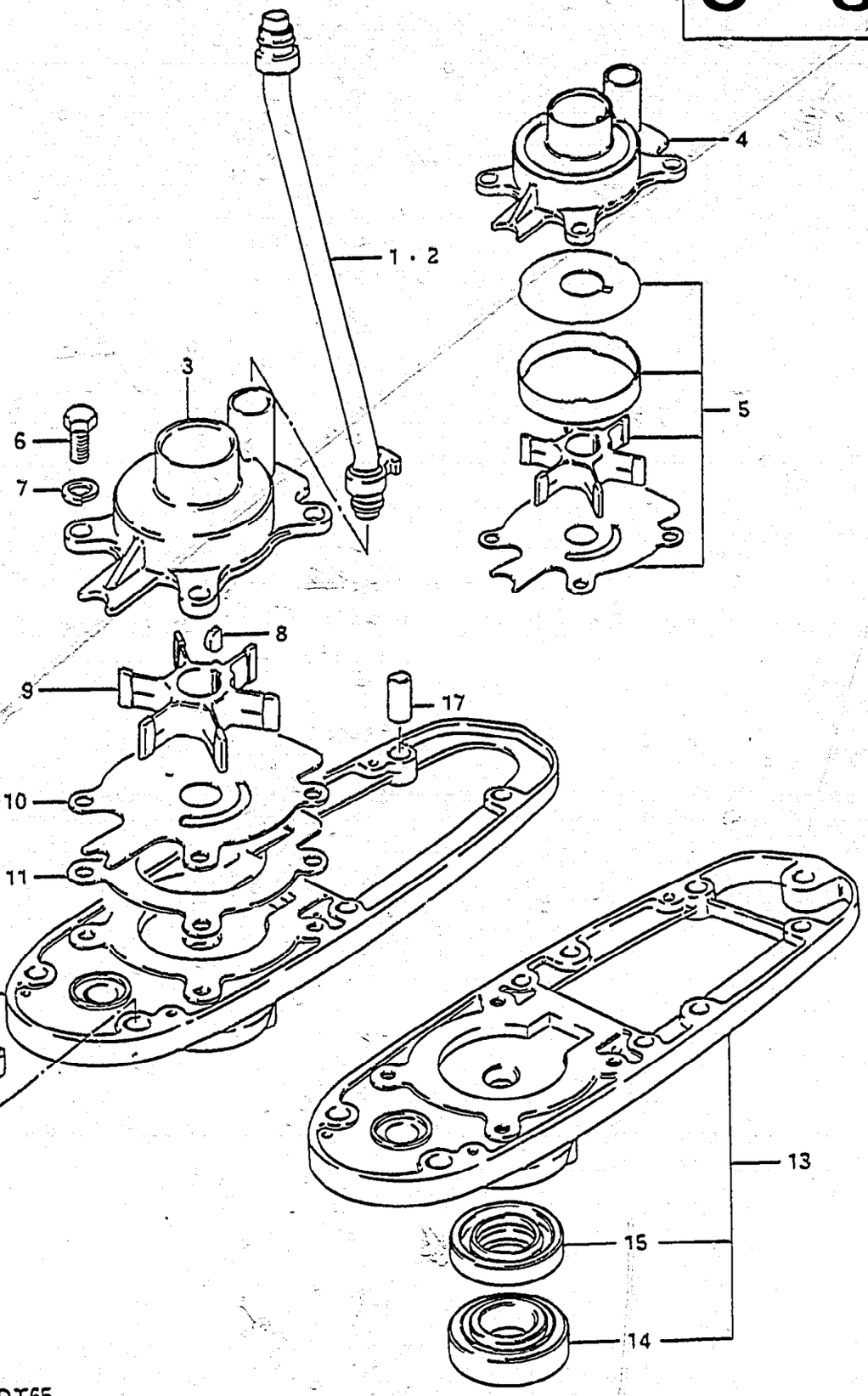

FIG. 8 WATER PUMP

Ref. No.	Part No.	Description	Q'ty 50/65	Remarks
1	17560-95500	TUBE, water (L type)	1	
2	17560-95510	TUBE, water (S type)	1	
3-1	17411-95203	CASE, water pump	1	
3-2	17411-95204	CASE, water pump	1	model VZ
4-1	17411-95211	CASE, water pump	1	DT50(GE9,MGE9,JE9,
4-2	17411-95212	CASE, water pump	1	MJE9,WJE9,WVZE40,
5-1	17400-95832	WATER PUMP REPAIR KIT	1	MVZE40)
5-2	17400-95200	WATER PUMP REPAIR KIT	1	DT65(GE9,JE9,VZE40)
6	09100-08139	BOLT	4	
7	09162-08003	LOCK WASHER	4	
8	09420-04005	KEY	1	
9	17461-95200	IMPELLER, water pump	1	
10-1	17471-95202	PLATE, pump case lower	1	model G to 17471-95203
10-2	17471-95203	PLATE, pump case lower	1	5001-002590~
11	17472-95200	GASKET	1	
12	56131-95200-01J	HOUSING, driveshaft bearing	1	model G to 56130-95200-01J
13	56130-95200-01J	HOUSING, driveshaft bearing	1	model J/VZ
14	09265-17001	·BEARING, drive shaft	1	model J/VZ
15	09289-17005	·OIL SEAL, drive shaft	1	model J/VZ
16	09206-11001	DOWEL PIN (OD:11,L:12)	1	
17	09206-11005	DOWEL PIN (OD:11,L:20)	1	

FIG.9

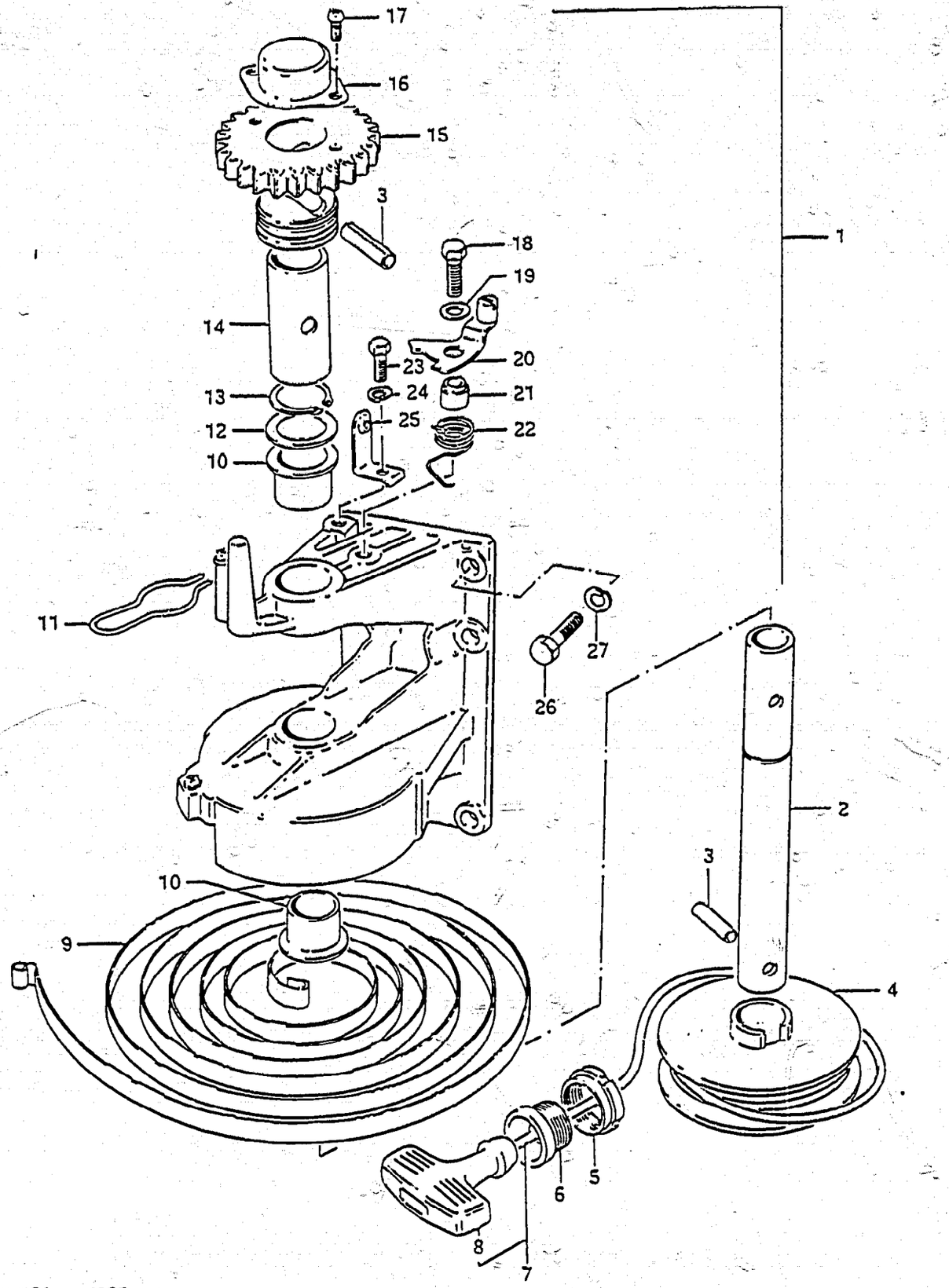

FIG.9 STARTER (DT50MG E3, MG E28)

Ref. No.	Part No.	Description	Q'ty 50	Remarks
1-1	18100-95220-01J	STARTER ASSY, recoil	1	to 18100-95221-01J
1-2	18100-95221-01J	STARTER ASSY, recoil	1	
2	18251-95220	·SHAFT, starter	1	from 18521-95220
3	18344-95220	·PIN (7φ)	2	from 18525-95220
4	18121-95220	·REEL, starter	1	
5	18182-95220	·NUT, rope	1	
6	18181-95220	·GUIDE, rope	1	
7	18200-95220	·GRIP ASSY, starter	1	from 18170-95220
8	18210-95220	··GRIP	1	
9	18142-95220	·SPRING, recoil	1	
10	18253-95220	·BUSHING, starter shaft	2	from 18522-95220
11	18271-95220	·SPRING, friction	1	from 18541-95220
12	18335-95220	·WASHER	1	from 18523-95220
13	18255-95220	·CIRCLIP	1	from 18524-95220
14	18264-95220	·BUSHING, pinion	1	from 18532-95220
15	18261-95220	·PINION	1	from 18531-95220
16	18266-95220	·CAP, pinion	1	from 18533-95220
17-1	02112-04088	·SCREW	2	-18100-95220-01J
17-2	18342-95220	·SCREW	2	
18	09100-06047	·BOLT	1	
19	09160-06015	·WASHER	1	
20	18280-95220	·LEVER, pinion stopper	1	from 18550-95220
21	18283-95220	·SPACER	1	from 18553-95220
22	18284-95220	·SPRING, return	1	from 18554-95220
23	09100-06058	·BOLT	1	
24	09162-06001	·LOCK WASHER	1	
25	18291-95220	·HOLDER, cable	1	from 18641-98220
26	01107-08258	BOLT	5	
27	08321-21088	LOCK WASHER	5	

FIG.10 (C-5,6) : DT50MG (E1, E9, E13)
DT50MJ (E3, E9, E13, E28)
DT50MVZ (E1, E7, E13, E28, E40)

DT50, DT65

FIG.10

C - 5

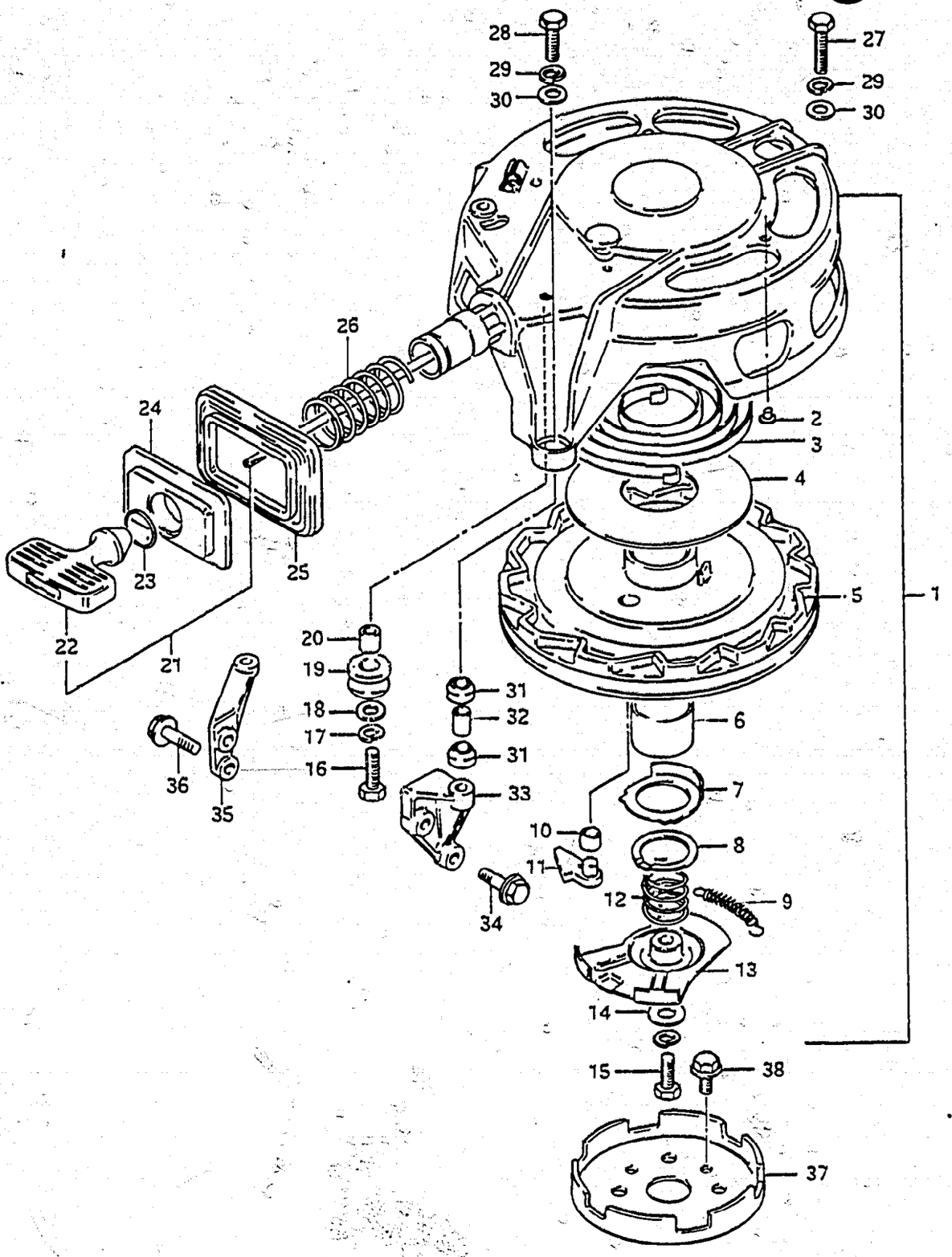

FIG.10 STARTER (DT50M)

Ref. No.	Part No.	Description	Q'ty 50	Remarks
		(DT50MG (E1, E9, E13)) (DT50MJ (E3, E9, E13, E28)) (DT50MVZ (E1, E7, E13, E28, E40))		
1-1	18100-95200-01J	STARTER ASSY, recoil	1	model G
1-2	18100-95201-01J	STARTER ASSY, recoil	1	model J/VZ from 18100-95200-01J
2	18123-95210	·DAMPER, rear	5	from 18124-95200
3	18142-95210	·SPRING	1	from 18141-95200
4	18144-95200	·PLATE, slide	2	from 18142-95200
5	18121-95200	·REEL	1	
6	18124-95210	·BUSHING	1	from 18112-95200
7	18157-95200	·WASHER	1	from 18122-95200
8	18127-95200	·CIRCLIP	1	from 18123-95200
9	18155-95200	·SPRING, return	1	from 18132-95200
10	18133-95210	·BUSHING	1	from 18133-95200
11	18130-95200	·RATCHET	1	from 18131-95200
12	18153-95200	·SPRING, friction	1	
13	18151-95200	·PLATE, friction	1	
14	18335-93000	·THRUST WASHER	1	from 18152-95200
15	01107-06168	·BOLT	1	
16	01107-06208	·BOLT	1	
17	08321-31068	·LOCK WASHER	2	
18	18335-95200	·WASHER	1	from 18175-95200
19	18187-95200	·ROLLER, starter	1	from 18173-95200
20	18188-95200	·GUIDE, roller	1	from 18174-95200

FIG.9 (C-4) : DT50MG E3, MG E28

DT50, DT65

FIG.10

C - 6

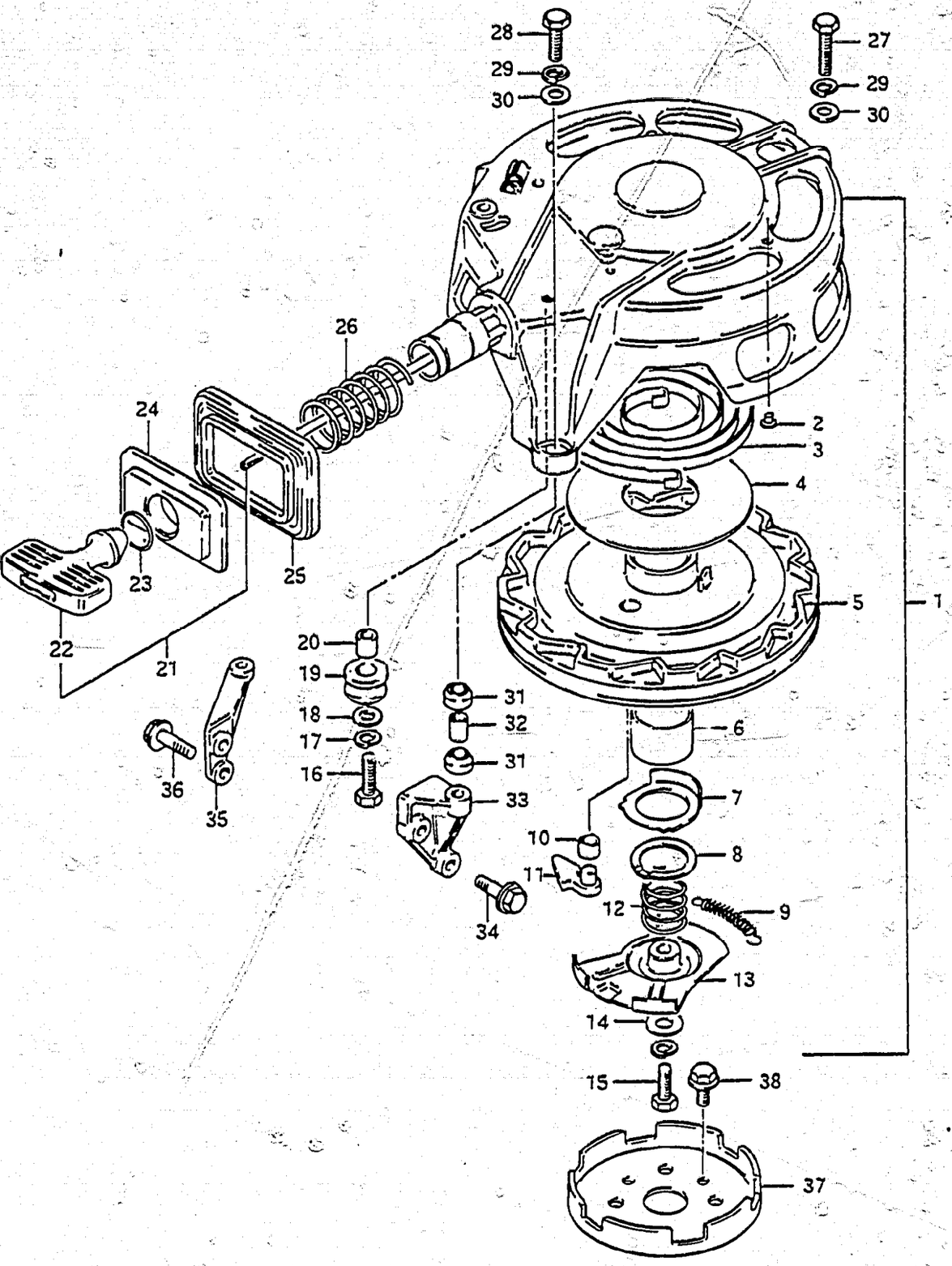

FIG.10 STARTER (DT50M)

Ref. No.	Part No.	Description	Q'ty 50	Remarks
		(DT50MG (E1, E9, E13))		
		(DT50MJ (E3, E9, E13, E28))		
		(DT50MVZ (E1, E7, E13, E28, E40))		
21	18200-95202	·GRIP ASSY	1	from 18170-95202
22	18210-93001	··GRIP	1	from 18172-95200
23	18195-95200	·SET RING	1	from 18184-95200
24	18191-95201	·DEFENSER	1	from 18181-95201
25	18192-95201	·RUBBER, defenser	1	from 18182-95201
26	18196-95200	·SPRING, defenser	1	from 18183-95200
27-1	01107-08408	BOLT	1	
27-2	01907-08408	BOLT	1	model VZ
28-1	01107-08358	BOLT	2	
28-2	01907-08358	BOLT	2	
29-1	08321-31088	LOCK WASHER	3	
29-2	08321-21088	LOCK WASHER	3	
30	08322-21088	WASHER	3	
31	09320-14011	CUSHION	6	
32	09180-08085	SPACER	3	
33	18711-95200-01J	BRACE, recoil starter RH	1	
34	01517-08308	BOLT	2	
35	18721-95200-01J	BRACE, recoil starter LH	1	
36	01517-08308	BOLT	2	
37	18411-95200	CUP, starter	1	
38	01517-08168	BOLT	4	

FIG.9 (C-4) : DT50MG E3, MG E28

FIG.11

C - 7

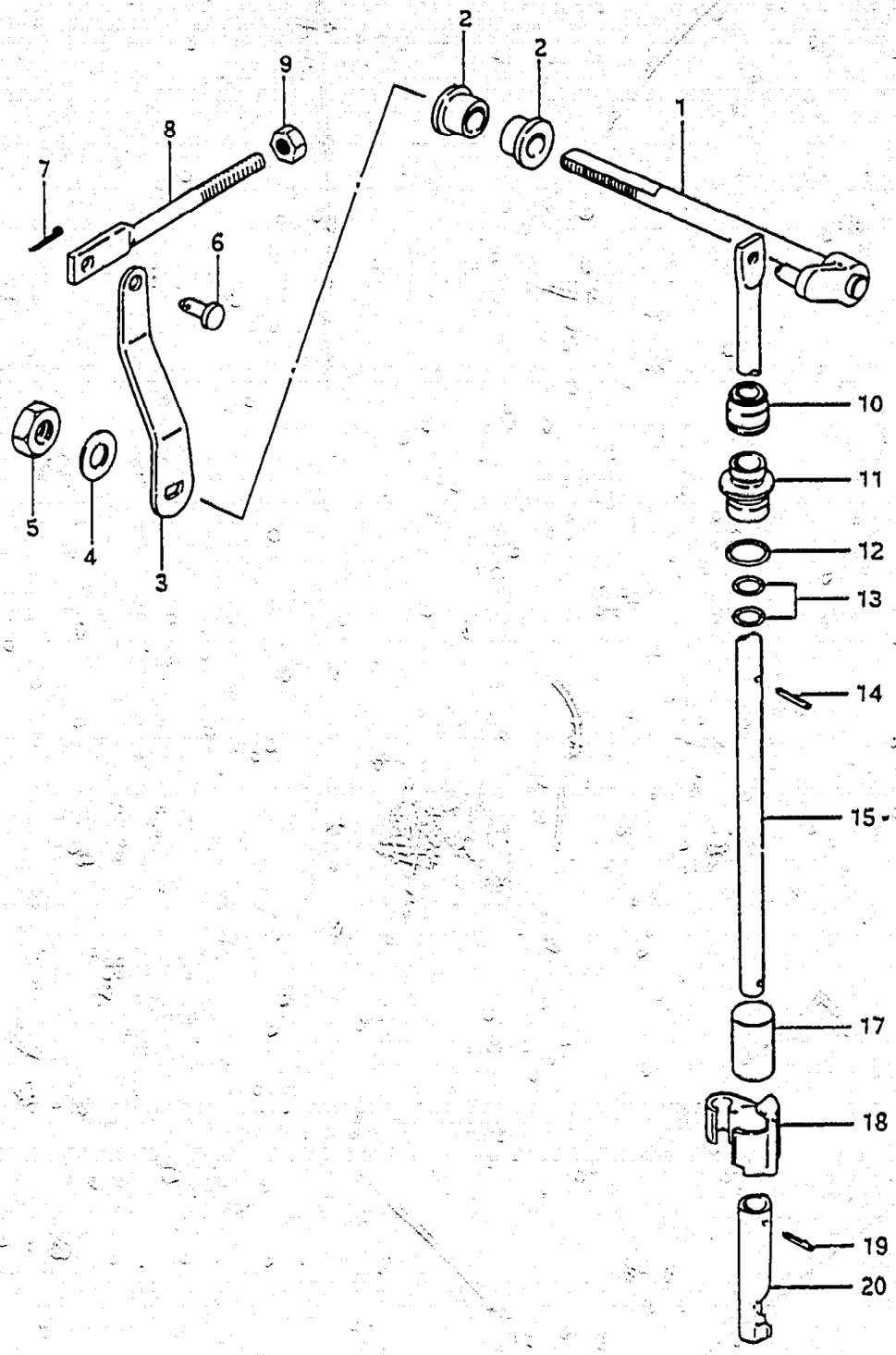

FIG.11 CLUTCH

Ref. No.	Part No.	Description	Q'ty 50/65	Remarks
1	21210-95201	SHAFT, clutch	1	
2	09306-08003	BUSHING, clutch shaft	2	
3	21213-95201	ARM, clutch shaft side	1	
4	09160-08015	WASHER, clutch shaft	1	8.5x16x1.6
5	09140-08012	NUT, clutch shaft	2	
6	09200-05010	PIN, clutch link	1	
7	09204-01001	COTTER PIN	1	
8	23111-95200	LINK, clutch	1	
9	09140-06004	NUT	1	
10	25223-95200	DUST SEAL	1	
11	25211-95202	GUIDE, shifting	1	
12	09280-11001	O RING, shifting rod guide	1	
13	09280-08005	O RING, shifting rod guide	2	ID:7.6,d:1.8
14	09205-02004	PIN, clutch rod (2.8x12)	1	
15	25111-95204	ROD, clutch (L type)	1	
16	25111-95704	ROD, clutch (S type)	1	
17-1	25232-95500	MAGNET	1	model G
17-2	25232-95501	MAGNET	1	from 25232-95500
18	25231-95501	HOLDER, magneto	1	
19	09205-03021	PIN, clutch rod (3.9x12)	1	
20	25311-95201	CAM, clutch	1	

FIG.12 (C-8) : DT50MG (E1, E3, E9, E13, E28)
DT50MJ (E3, E9, E13, E28)
DT50MVZ (E1, E7, E13, E28, E40)

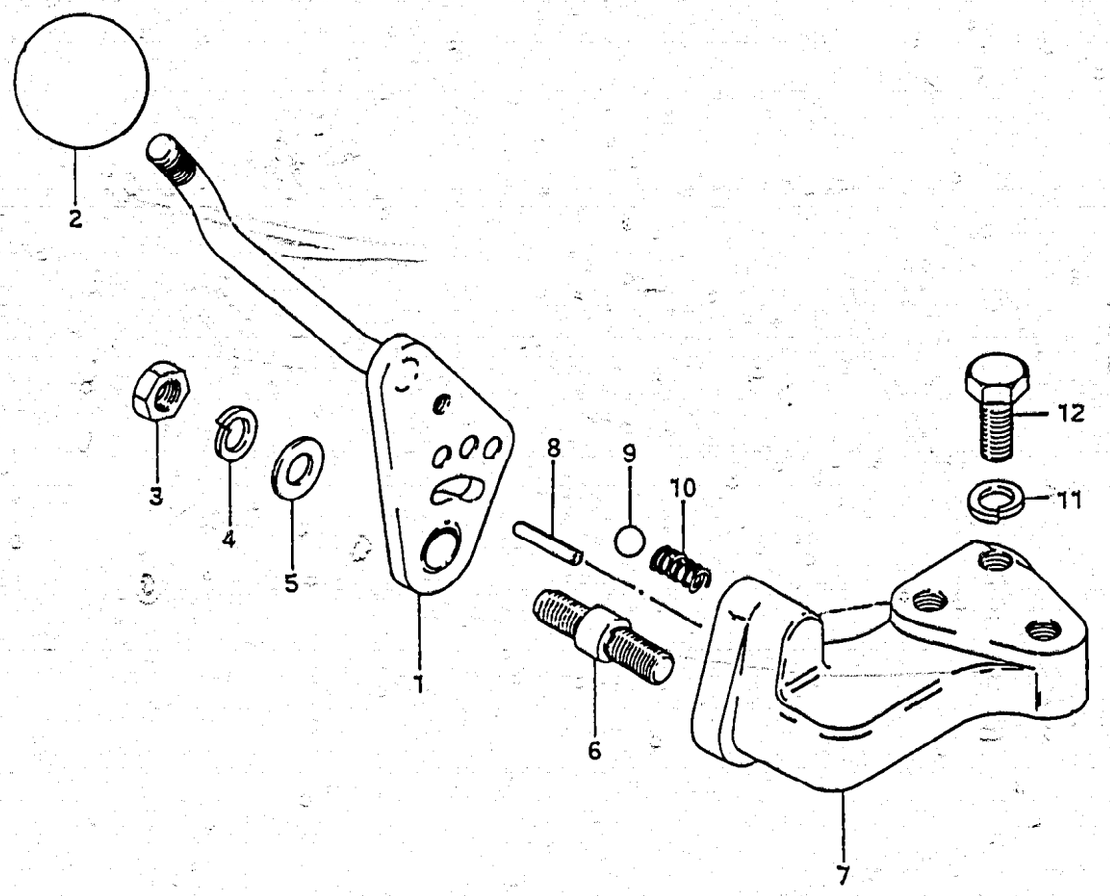

FIG.12 CLUTCH LEVER (DT50M)

Ref. No.	Part No.	Description	Q'ty	Remarks
		(DT50MG (E1, E3, E9, E13, E28)) (DT50MJ (E3, E9, E13, E28)) (DT50MVZ (E1, E7, E13, E28, E40))	50	
1-1	21110-95211	LEVER, clutch	1	to 21110-95212
1-2	21110-95212	LEVER, clutch	1	
2	21116-95210	·KNOB, clutch lever	1	
3	09159-08026	NUT, clutch lever	1	
4	09162-08003	LOCK WASHER	1	
5	09160-08014	WASHER (8.5x23x1.5)	1	
6	21211-95211	SHAFT, clutch lever	1	
7-1	21150-95211-01J	BRACKET, clutch lever	1	model G to 21150-95212-01J
7-2	21150-95212-01J	BRACKET, clutch lever	1	model J/VZ
8	09205-05001	·PIN	1	
9	09260-10003	BALL, clutch notch	1	
10	09440-07021	SPRING, clutch notch	1	
11	09162-08003	LOCK WASHER	3	
12	09100-08090	BOLT, clutch lever bracket	3	8x16

FIG.11 (C-7) : DT50, DT65

FIG.13

C - 9

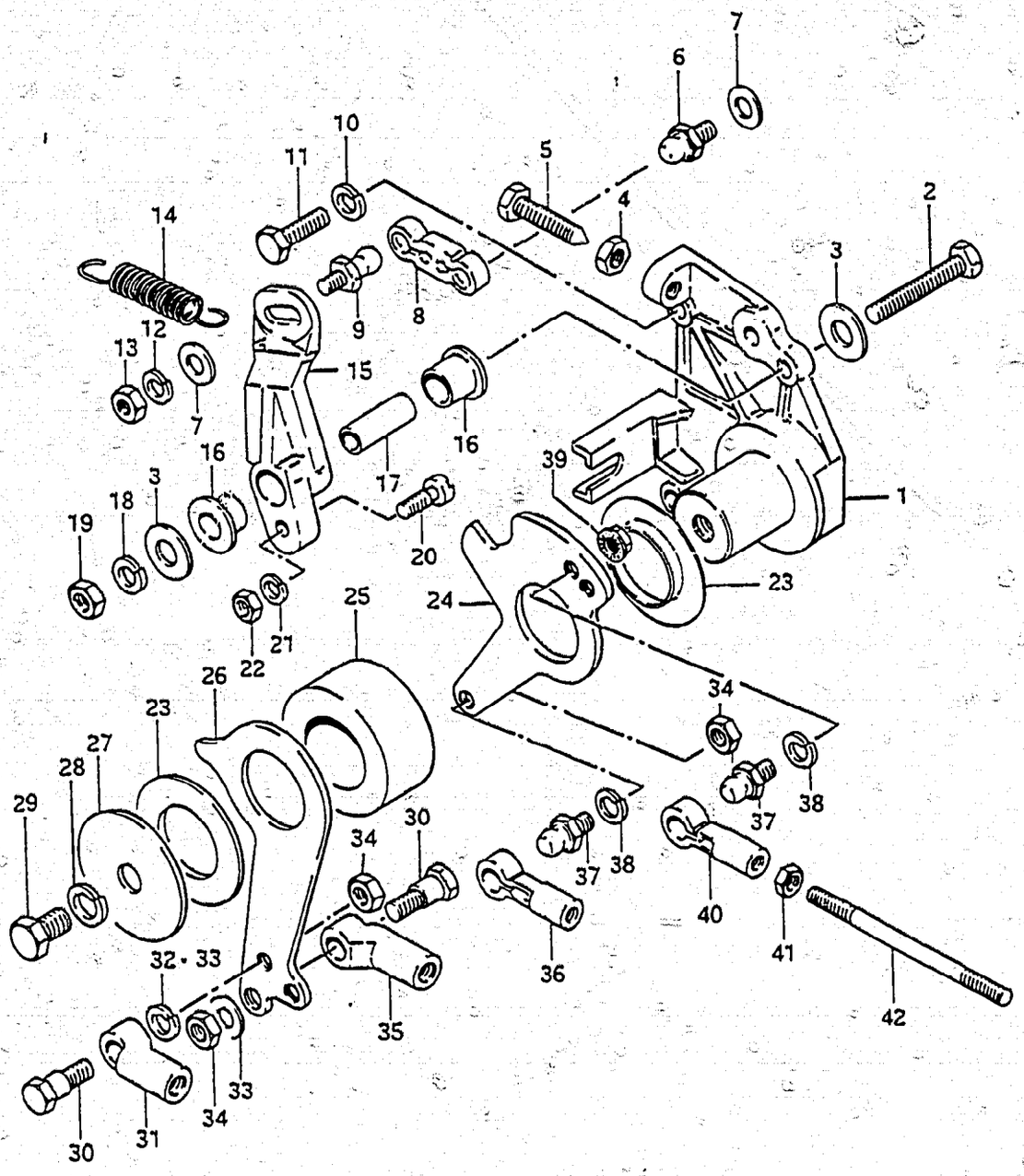

FIG.13 THROTTLE / CLUTCH CONTROL

Ref. No.	Part No.	Description	Q'ty 50/65	Remarks
1	67461-95302-01J	BRACKET, throttle / clutch lever	1	
2-1	09100-06035	BOLT (6x38)	1	to 09100-06097
2-2	09100-06097	BOLT (6x38)	1	
3	09160-06036	WASHER (6.5x18x1.5)	2	
4	09140-06004	NUT	1	
5	09100-06083	BOLT	1	
6	09119-05010	BALL PIVOT	1	
7	09160-05010	WASHER (5.5x10x0.8)	2	
8	67468-95301	CONNECTOR, spark advance	1	
9	09119-05011	BALL PIVOT	1	
10	08321-21068	LOCK WASHER	3	
11-1	01107-06208	BOLT	3	
11-2	01907-06208	BOLT	3	model VZ
12	09162-05002	LOCK WASHER	1	
13	09140-05001	NUT	1	
14	09443-09010	SPRING, spark advance lever	1	
15	67475-95300-01J	LEVER, spark advance	1	
16	09301-09001	BUSHING	2	
17	09180-06077	SPACER (6.1x9x23)	1	
18	09162-06001	LOCK WASHER	1	
19	09140-06004	NUT	1	
20	09123-05007	SCREW (5x15)	1	
21	09162-05002	LOCK WASHER	1	
22	09140-05001	NUT	1	
23	09306-25001	BUSHING, throttle control	2	
24	67462-95300	LEVER, throttle control	1	
25	09180-25058	SPACER (25.1x43x19.5)	1	
26	67465-95300	LEVER, clutch control	1	
27	09160-08040	WASHER (8.5x46x2)	1	
28	09162-08003	LOCK WASHER	1	
29	09100-08090	BOLT (8x12)	1	
30	09111-06021	BOLT, clutch lever	2	
31-1	67467-95200	CONNECTOR, clutch cable	1	Black, to 67467-95201
31-2	67467-95201	CONNECTOR, clutch cable	1	

FIG.14 (C-11) : DT50MG (E1, E3, E9, E13, E28)
DT50MJ (E3, E9, E13, E28)
DT50MVZ (E1, E7, E13, E28, E40)

DT50, DT65

FIG.13

C - 10

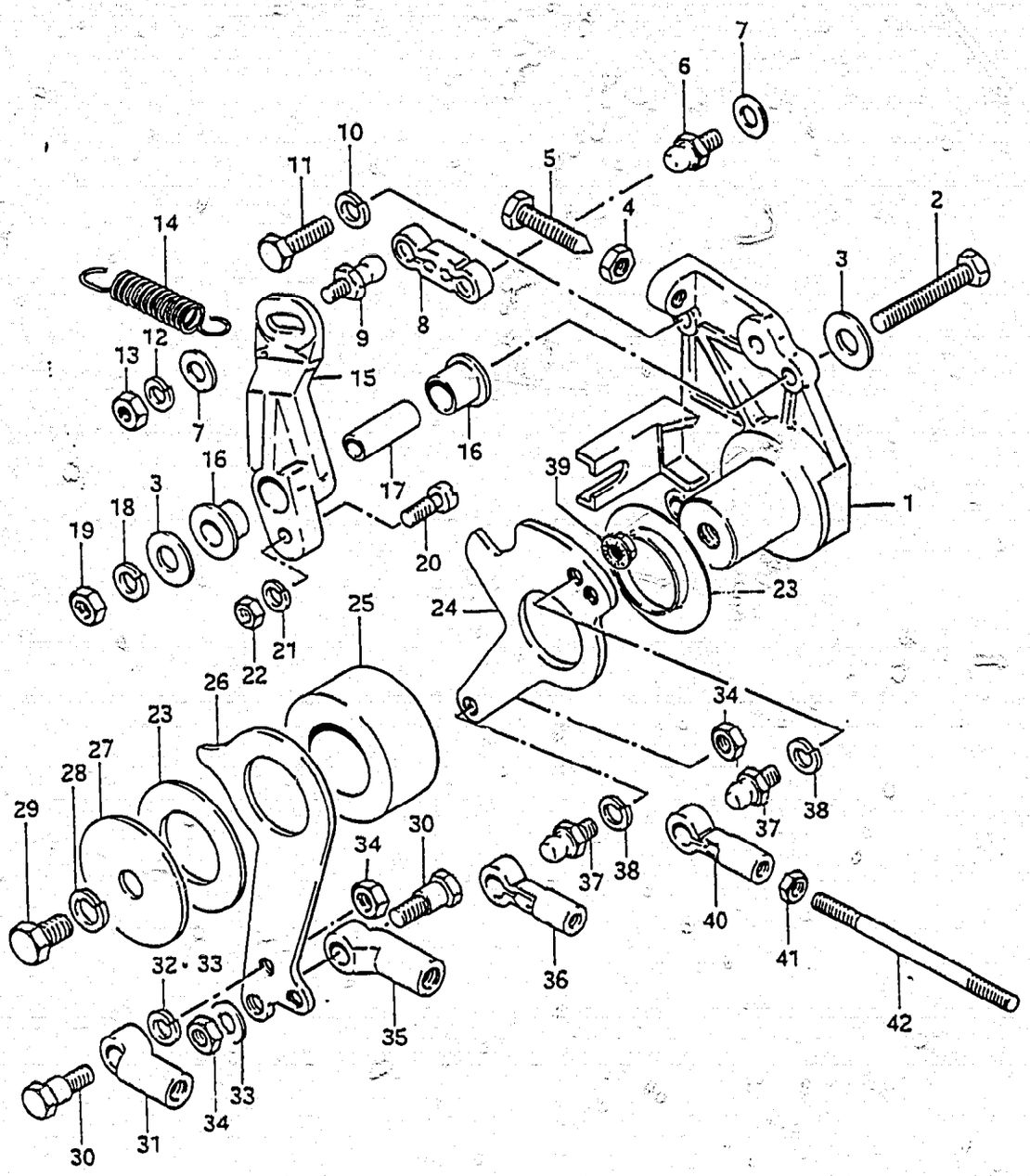

FIG.13 THROTTLE / CLUTCH CONTROL

Ref. No.	Part No.	Description	Q'ty 50/65	Remarks
32	09162-06001	LOCK WASHER	1	
33	09160-06015	WASHER (6.5x13x1)	2	
34-1	09140-06004	NUT	1	
34-2	09140-06004	NUT	3	
35-1	23311-95200	CONNECTOR, clutch link (6 threads, white)	1	to 23311-95201
35-2	23311-95201	CONNECTOR, clutch link (6 threads, white)	1	
36	67466-95200	CONNECTOR, remote control	1	Black
37-1	09119-06039	BALL PIVOT to (09119-06039)+(08316-26068)	2	
37-2	09119-06047	BALL PIVOT	2	
38	09162-06001	LOCK WASHER	2	
39	08316-26068	NUT	1	
40	67463-95200	CONNECTOR, throttle control (5 threads, white)	2	
41-1	09140-05001	NUT	2	
41-2	08310-11058	NUT	2	
42	67464-95201	ROD, throttle to carbu	1	

FIG.14 (C-11) : DT50MG (E1, E3, E9, E13, E28)
DT50MJ (E3, E9, E13, E28)
DT50MVZ (E1, E7, E13, E28, E40)

DT50, DT65

FIG. 14

C - 11

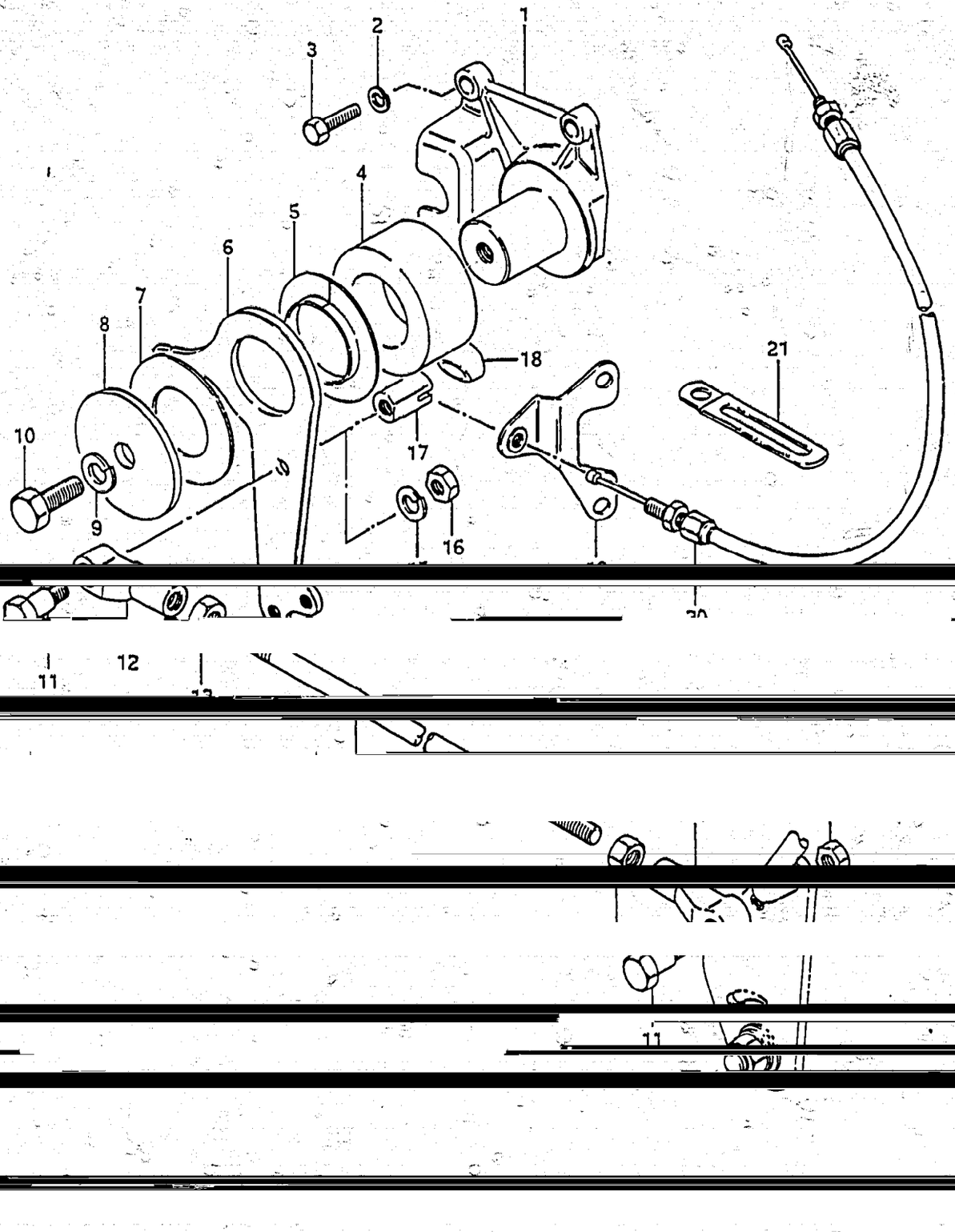

21

FIG.14 THROTTLE / CLUTCH CONTROL (DT50M)

Ref. No.	Part No.	Description	Q'ty 50	Remarks
		(DT50MG (E1, E3, E9, E13, E28))		
		(DT50MJ (E3, E9, E13, E28))		
		(DT50MVZ (E1, E7, E13, E28, E40))		
1	67461-95200-01J	BRACKET, throttle & clutch lever	1	
2	08321-21068	LOCK WASHER	3	
3-1	01107-06208	BOLT	3	
3-2	01907-06208	BOLT	3	model VZ
4	09180-25055	SPACER (25.1x43x22.5)	1	
5	09306-25001	BUSHING, throttle control	1	
6	67465-35210	LEVER, clutch control	1	
7	09161-25001	WASHER (25.2x46x1)	1	
8	09160-08040	WASHER (8.5x46x2)	1	
9	09162-08003	LOCK WASHER	1	
10	09100-08090	BOLT	1	
11	09111-06021	BOLT	2	
12	23312-95210	CONNECTOR	2	
13	09140-05001	NUT	2	
14	23115-95212	LINK, clutch lever (L:270)	1	
16	09140-06004	NUT	2	
17	18640-95220	HOLDER, inner cable	1	
18	18647-95200	PROTECTOR	1	
19	18642-95221	HOLDER, cable	1	DT50MG E9/MG E28
20	16630-05800	CABLE ASSY, control lock	1	

DT50, DT65

FIG.15

D - 2

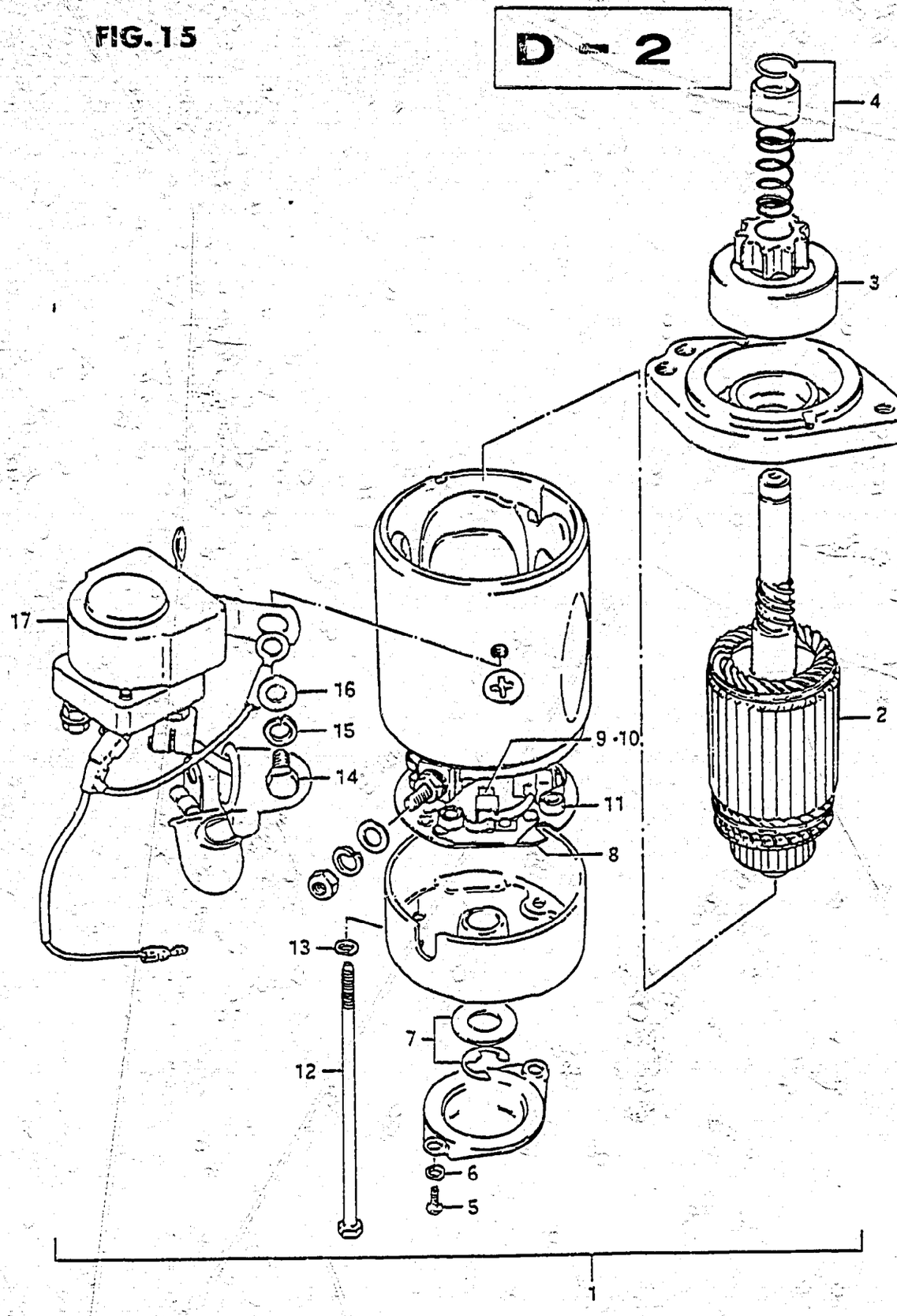

FIG.15 STARTING MOTOR

Ref. No.	Part No.	Description	Q'ty 50/65	Remarks
1	31100-95242	MOTOR ASSY, starting	1	from 31100-95241
2	31311-95240	·ARMATURE	1	
3	31320-95240	·PINION ASSY	1	
4	31312-95241	·STOPPER SET, pinion	1	
5	02112-04128	·SCREW	2	
6	08321-21048	·LOCK WASHER	2	
7	31361-95240	·THRUST WASHER KIT	1	
8-1	31173-95241	·HOLDER ASSY, motor brush	1	model G
8-2	31173-95242	·HOLDER ASSY, motor brush	1	
9-1	31131-95240	··BRUSH, (+)	2	
9-2	31131-95241	··BRUSH, (+)	2	from 31131-95240
10-1	31132-95241	··BRUSH, (-)	2	from 31132-95240
10-2	31132-95242	··BRUSH, (-)	1	
11	31135-95240	··SPRING, brush	4	
12	31281-95240	·BOLT	2	
13	08321-21058	·LOCK WASHER	2	
14	01107-06108	·BOLT	2	
15	08321-21068	·LOCK WASHER	2	
16	08322-21068	·WASHER	2	
17	31800-95241	·RELAY ASSY	1	from 31800-95240

DT50, DT65

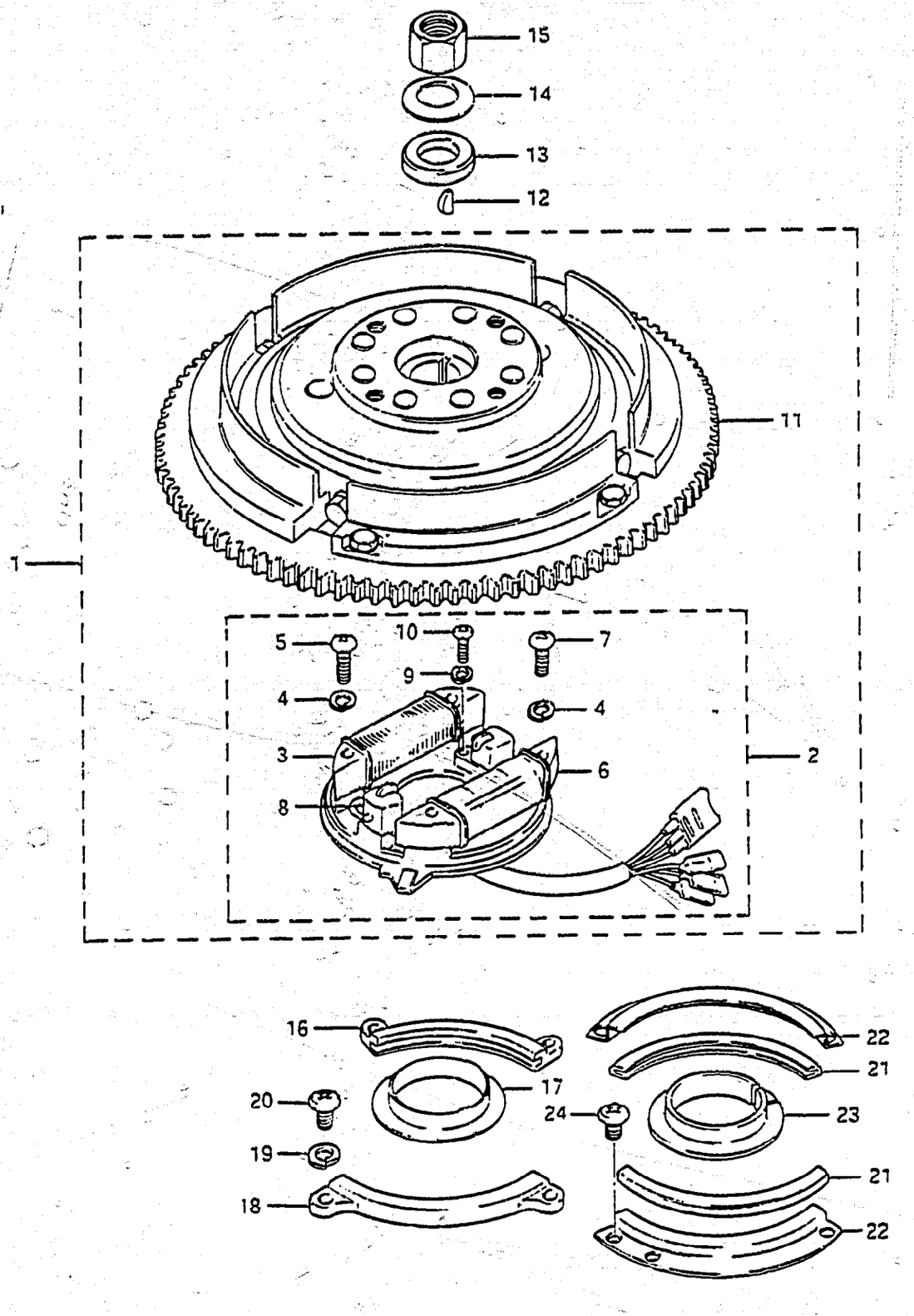

FIG.16 MAGNETO (DT50)

Ref. No.	Part No.	Description	Q'ty 50	Remarks
1-1	32100-95300	MAGNETO ASSY	1	to 32100-95301
1-2	32100-95301	MAGNETO ASSY to (32101-95304)+(32102-95301)	1	5001-001738~
2-1	32101-95300	·STATOR ASSY	1	model G
2-2	32101-95303	·STATOR ASSY	1	from 32101-95302
2-3	32101-95304	·STATOR ASSY	1	from 32101-95303
3	32120-95301	··COIL, battery charging	1	from 32120-95300 12V,80W
4	08321-21058	··LOCK WASHER	4	
5	02112-05258	··SCREW	2	
6	32140-95300	··COIL, ignition primary	1	
7	02112-05208	··SCREW	2	
8-1	32150-95300	··SENSOR, ignition timing	2	to 32150-95301
8-2	32150-95301	··SENSOR, ignition timing	2	model G
8-3	32150-95302	··SENSOR, ignition timing	2	from 32150-95301
9	08321-21058	··LOCK WASHER	4	
10	02112-05108	··SCREW	4	
11-1	32102-95300	·ROTOR (model G)	1	to 32102-95301
11-2	32102-95301	·ROTOR	1	
12	08341-31059	KEY	1	
13	09180-18007	WASHER	1	
14	09164-18001	LOCK WASHER	1	
15	08310-12188	NUT	1	
16	32397-95301	RETAINER (3)	1	
17	32395-95301	RETAINER (1)	1	
18	32396-95301	RETAINER (2)	1	
19	08321-21068	LOCK WASHER	4	
20	02112-06128	SCREW	4	
21	32399-95300	RETAINER (3)	2	
22	32396-95302	RETAINER (2)	2	
23	32395-95302	RETAINER (1)	1	
24	02112-06088	SCREW	4	

FIG.17 (D-4,5) : DT65
FIG.18 (D-6) : DT50MG (E1, E3, E9, E13, E28)
FIG.19 (D-7) : DT50MJ (E3, E9, E13, E28)
DT50MVZ (E1, E7, E13, E28, E40)

FIG.17

D - 4

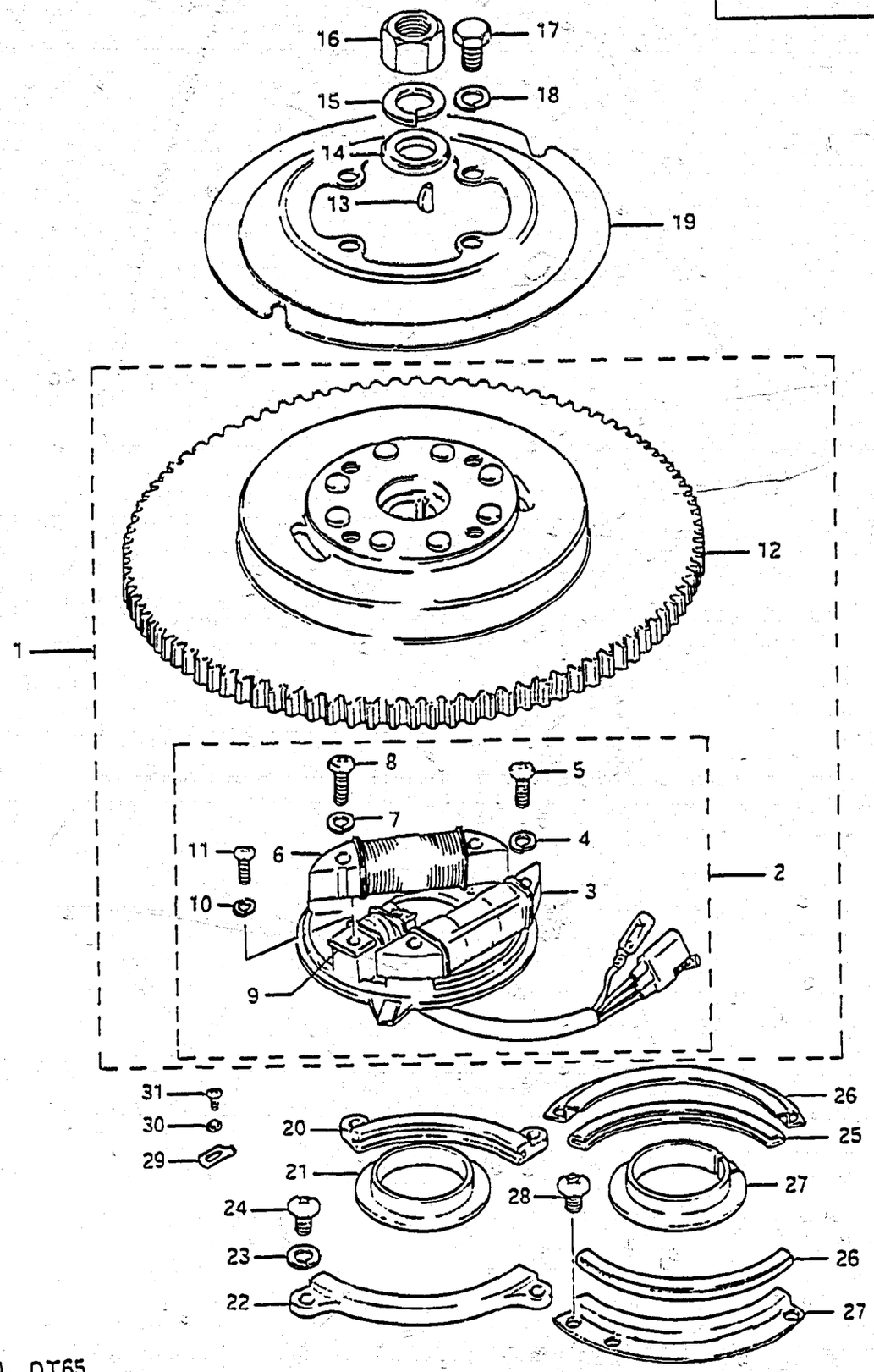

FIG.17 MAGNETO (DT65)

Ref. No.	Part No.	Description	Q'ty 65	Remarks
1-1	32100-95330	MAGNETO ASSY (model G)	1	to 32100-95331
1-2	32100-95331	MAGNETO ASSY to (32101-95334)+(32102-95332)	1	6501-002001~
2-1	32101-95333	·STATOR ASSY	1	from 32101-95332
2-2	32101-95334	·STATOR ASSY	1	from 32101-95333
3-1	32140-93232	··COIL, ignition (model G)	1	from 32140-93231
3-2	32140-93233	··COIL, ignition	1	from 32140-93232
4	08321-21058	··LOCK WASHER	2	
5	02112-05208	··SCREW	2	
6-1	32120-95330	··COIL, battery charging (12V,80W)	1	to 32120-95300
6-2	32120-95300	··COIL, battery charging (12V,80W)	1	model G
6-3	32120-95301	··COIL, battery charging (12V,80W)	1	from 32120-95300
7	08321-21058	··LOCK WASHER	2	
8	02112-05258	··SCREW	2	
9-1	32150-95330	··SENSER, ignition timing	1	model G
9-2	32150-95331	··SENSER, ignition timing	1	from 32150-95330
10	08321-21048	··LOCK WASHER	2	
11	02112-04168	··SCREW	2	
12-1	32102-95331	·ROTOR (model G)	1	to 32102-95332
12-2	32102-95332	·ROTOR	1	
13	08341-31059	KEY	1	
14	09180-18007	WASHER	1	
15	09164-18001	LOCK WASHER	1	
16	08310-12188	NUT	1	
17	01107-08168	BOLT	4	
18	08321-21088	LOCK WASHER	4	
19	32725-95300	INSULATOR, magneto	1	

FIG.16 (D-3) : DT50
FIG.18 (D-6) : DT50MG (E1, E3, E9, E13, E28)
FIG.19 (D-7) : DT50MJ (E3, E9, E13, E28)
DT50MVZ (E1, E7, E13, E28, E40)

FIG. 17

D - 5

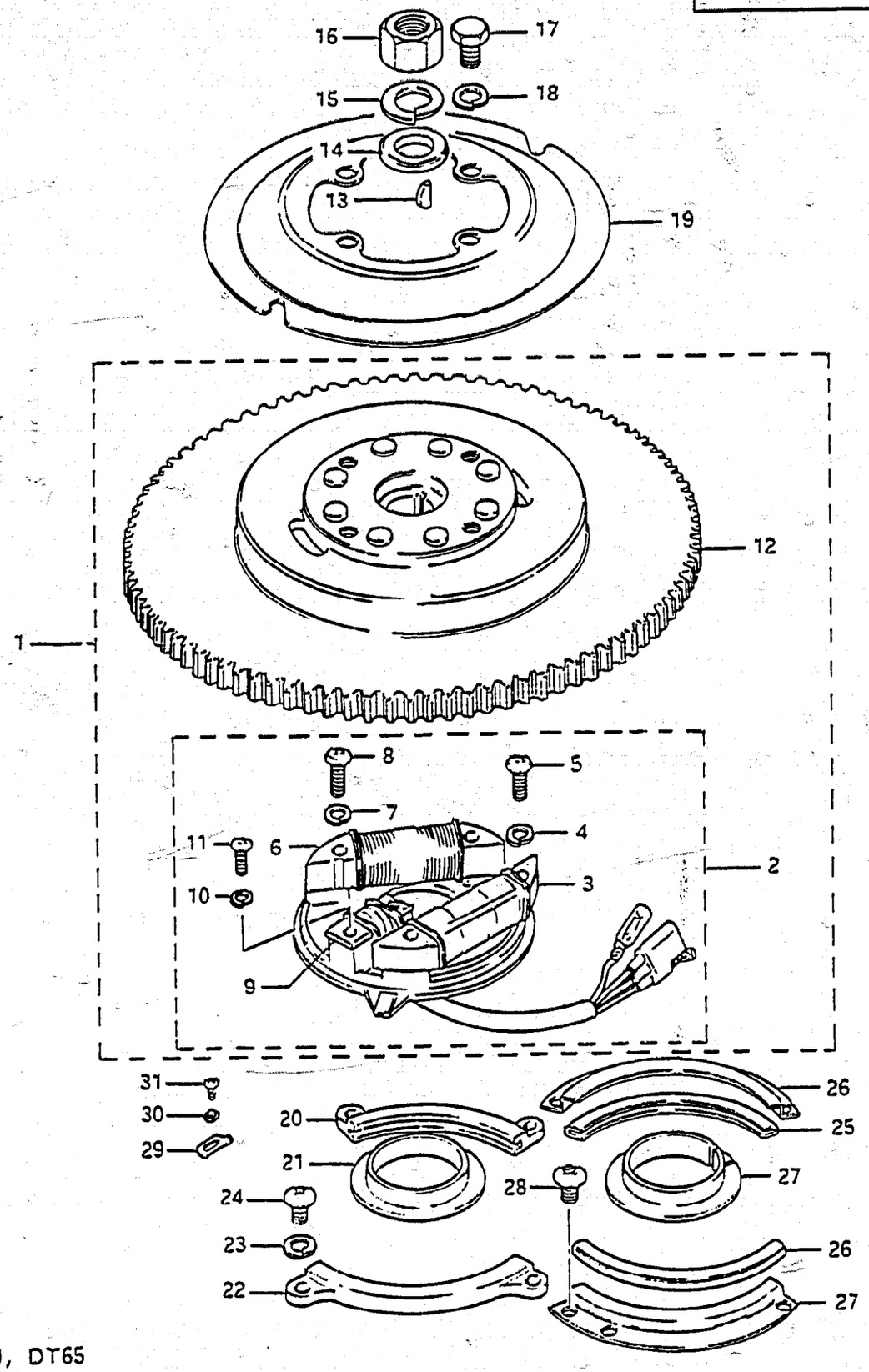

25

FIG.17 MAGNETO (DT65)

Ref. No.	Part No.	Description	Q'ty 65	Remarks
20	32397-95301	RETAINER, (3)	1	
21	32395-95301	RETAINER, (1)	1	
22	32396-95301	RETAINER, (2)	1	
23	08321-21068	LOCK WASHER	4	
24	02112-06128	SCREW	4	
25	32399-95300	RETAINER (3)	2	
26	32396-95302	RETAINER (2)	2	
27	32395-95302	RETAINER (1)	1	
28	02112-06088	SCREW	4	
29	32398-95300	STOPPER, stator	1	
30	09162-04002	LOCK WASHER	1	
31	09125-04004	SCREW	1	

FIG.16 (D-3) : DT50
FIG.18 (D-6) : DT50MG (E1, E3, E9, E13, E28)
FIG.19 (D-7) : DT50MJ (E3, E9, E13, E28)
DT50MVZ (E1, E7, E13, E28, E40)

DT50, DT65

FIG.18

D - 6

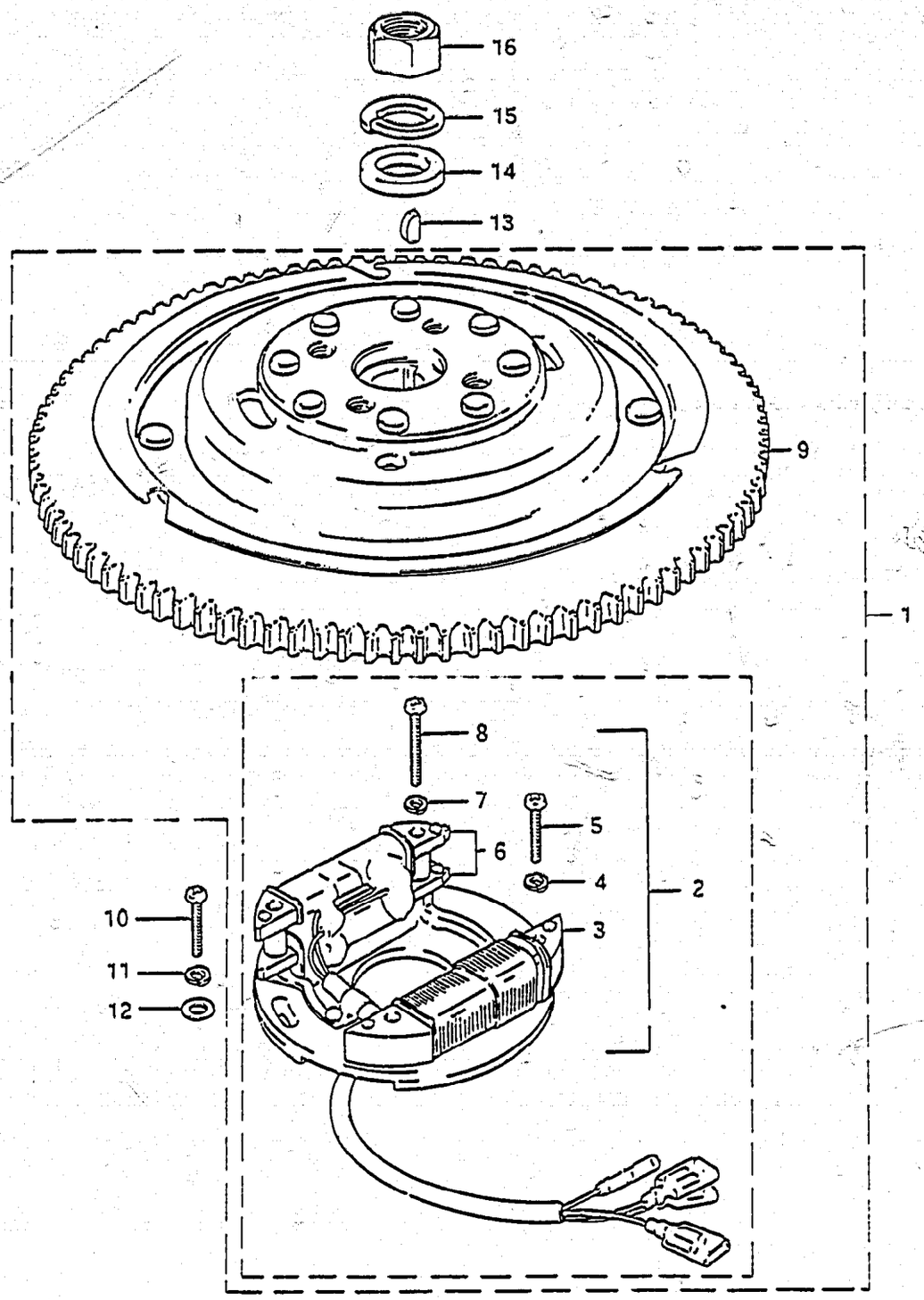

FIG.18 MAGNETO (DT50MG)

Ref. No.	Part No.	Description	Q'ty 50	Remarks
		(DT50MG (E1, E3, E9, E13, E28))		
1-1	32100-95203	MAGNETO ASSY	1	to 32100-95204
1-2	32100-95204	MAGNETO ASSY to (32101-95213)+(32102-95202)	1	
2-1	32101-95211	·STATOR ASSY	1	to 32101-95212
2-2	32101-95213	·STATOR ASSY	1	from 32101-95212
3	32120-95211	··COIL, lighting (COIL, battery charging)	1	from 32120-95210
4	08321-21058	··LOCK WASHER	2	
5	02112-05258	··SCREW	2	
6-1	32160-95210	··COIL, ignition primary	1	to 32160-95211
6-2	32160-95211	··COIL, ignition primary	1	
7	08321-21058	··LOCK WASHER	2	
8	02112-05358	··SCREW	2	
9	32102-95202	·ROTOR	1	
10	02112-05258	SCREW	2	
11	08321-21058	LOCK WASHER	2	
12	08322-21058	WASHER	2	
13	08341-31059	KEY	1	
14	09180-18007	WASHER	1	
15	09164-18001	LOCK WASHER	1	
16	08310-12188	NUT	1	

FIG.16 (D-3) : DT50
FIG.17 (D-4,5) : DT65
FIG.19 (D-7) : DT50MJ (E3, E9, E13, E28)
DT50MVZ (E1, E7, E13, E28, E40)

DT50, DT65

FIG.19

D - 7

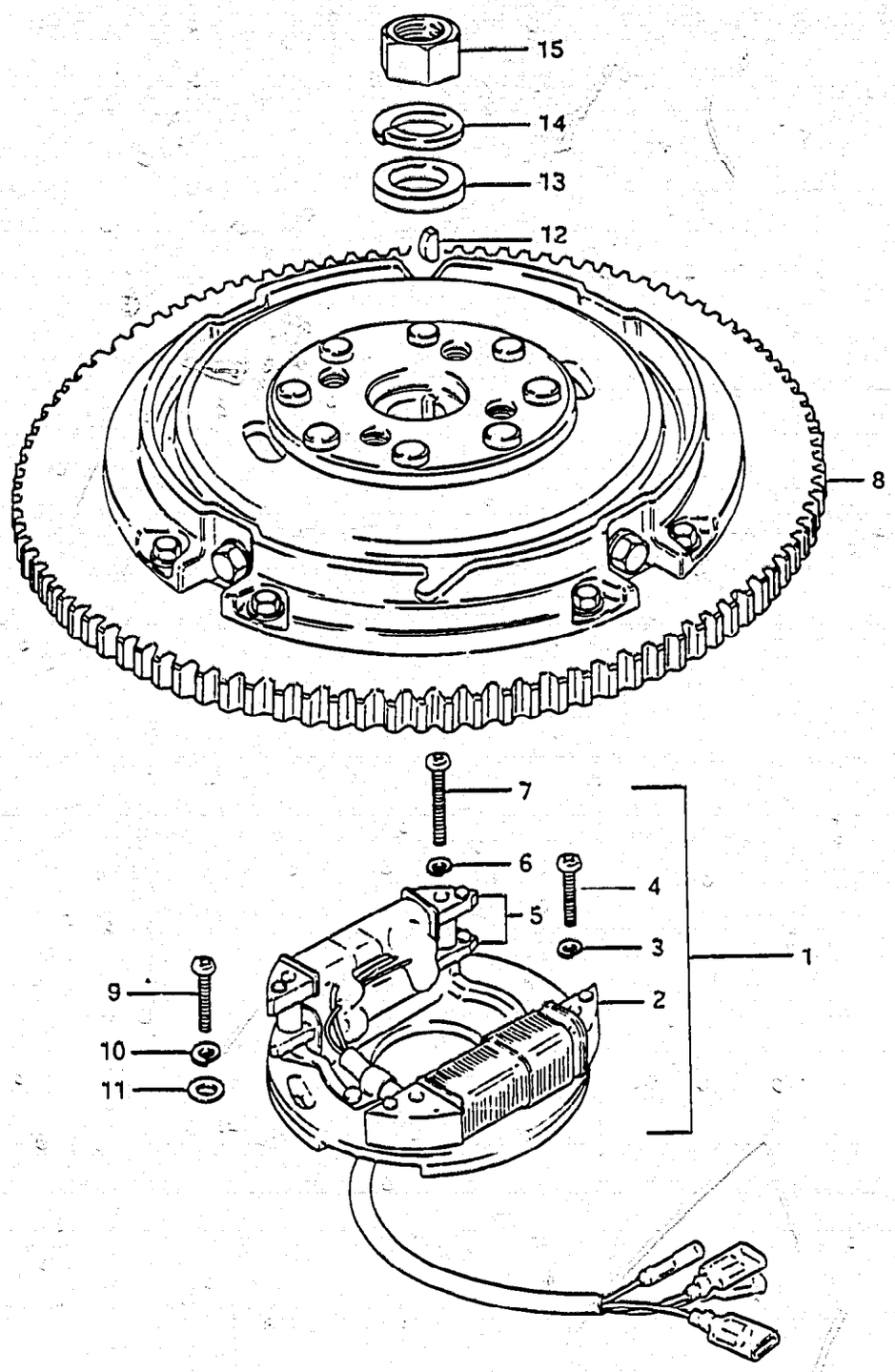

FIG.19 MAGNETO (DT50MJ /MVZ)

Ref. No.	Part No.	Description	Q'ty 50	Remarks
		(DT50MJ (E3, E9, E13, E28)) (DT50MVZ (E1, E7, E13, E28, E40))		
1	32101-95214	STATOR ASSY	1	
2	32120-95211	·COIL, lighting (COIL, battery charging)	1	
3	08321-21058	·LOCK WASHER	2	
4	02112-05258	·SCREW	2	
5	32160-95211	·COIL, ignition primary	1	
6	08321-21058	·LOCK WASHER	2	
7	02112-05358	·SCREW	2	
8	32102-95220	ROTOR	1	
9	02112-05258	SCREW	2	
10	08321-21058	LOCK WASHER	2	
11	08322-21058	WASHER	2	
12	08341-31059	KEY	1	
13	09180-18007	WASHER	1	
14	09164-18001	LOCK WASHER	1	
15	08310-12188	NUT	1	

FIG.16 (D-3) : DT50
FIG.17 (D-4,5) : DT65
FIG.18 (D-6) : DT50MG (E1, E3, E9, E13, E28)

FIG.20

D - 8

JOINT BOX

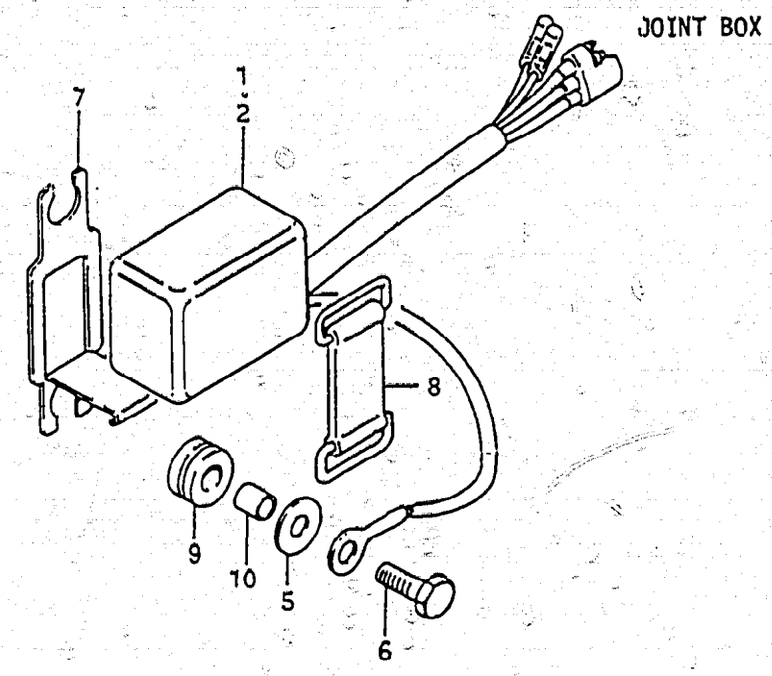

FIG.20 C.D.I.UNIT

Ref. No.	Part No.	Description	Q'ty 50	Q'ty 65	Remarks
1	32900-95300	C.D.I UNIT	1	-	
2	32900-95330	C.D.I UNIT	-	1	
3	32900-95200	C.D.I UNIT	1	-	DT50MG(E1,E3,E9,E13, E28) DT50MJ(E9,E13) DT50MVZ(E7,E13,E40)
4	32900-95220	C.D.I UNIT	1	-	DT50MJ(E3,E28) DT50MVZ(E1,E28)
5	09160-06052	WASHER	2	2	
6	01107-06208	BOLT	2	2	
7	32911-93200	BRACKET, C.D. unit	1	1	
8	09462-00017	BAND	1	1	
9	09320-08001	CUSHION	2	2	
10	09180-06044	SPACER (6.1x8x9.5)	2	2	

JOINT BOX

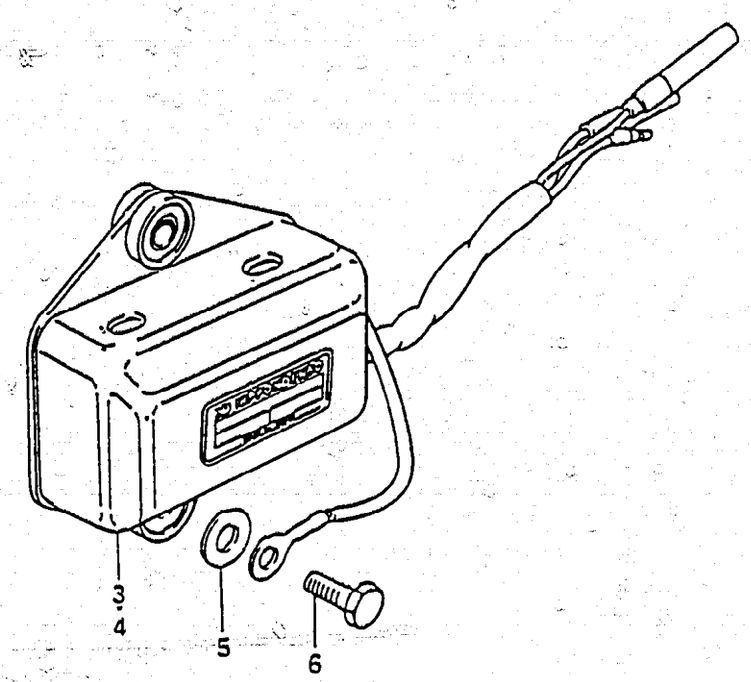

DT50, DT65

FIG.21

D - 9

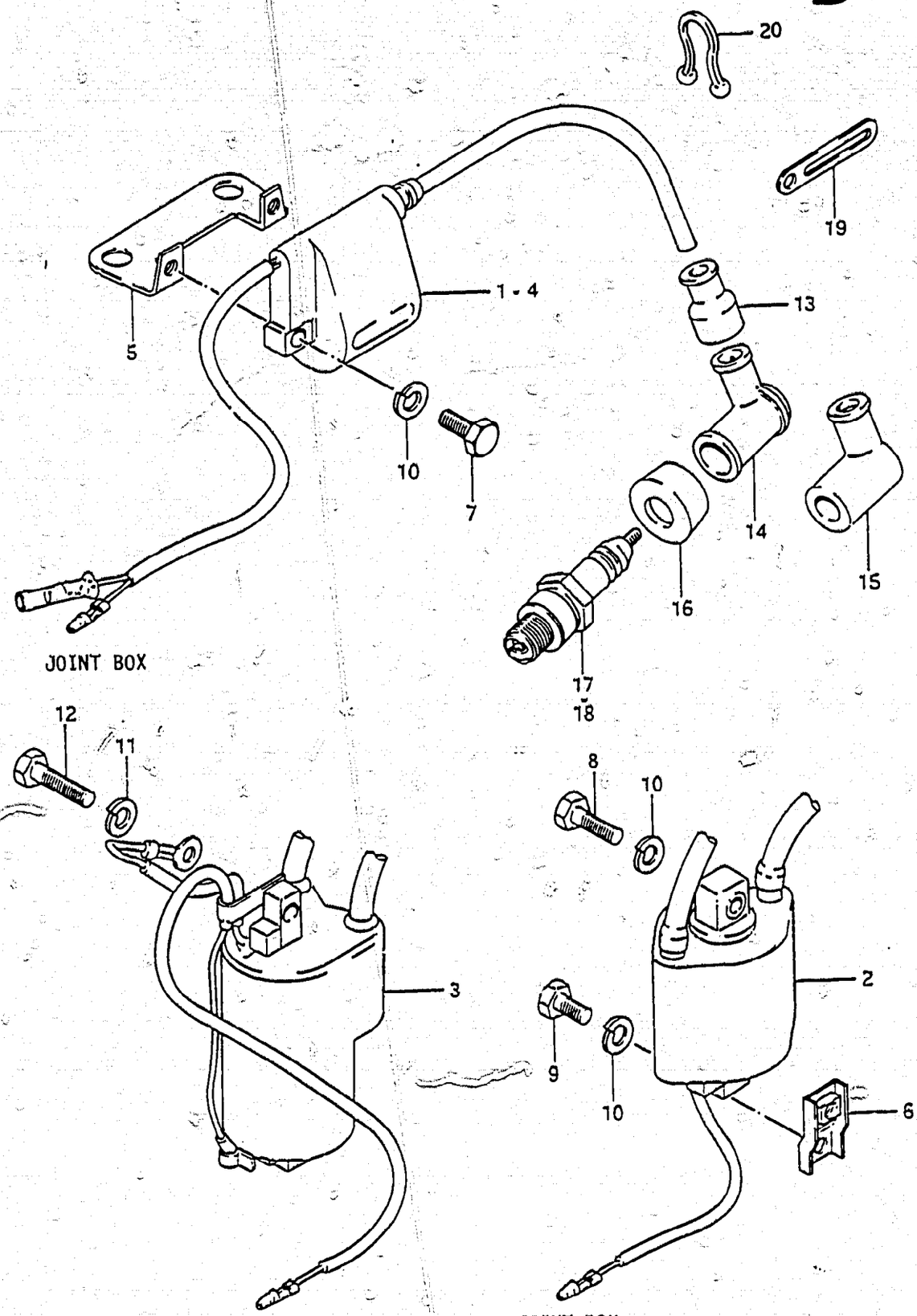

DT50, DT65

FIG.21 IGNITION COIL

Ref. No.	Part No.	Description	Q'ty 50	Q'ty 65	Remarks
1	33410-95300	COIL ASSY, ignition upper	1	-	
2	33410-95330	COIL ASSY, ignition upper	-	1	
3	33410-95211	COIL ASSY, ignition upper	1	-	DT50MG(E1,E3,E9,E13, E28) DT50MJ(E3,E9,E13,E28) DT50MVZ(E1,E7,E13, E28,E40)
4	33420-95300	COIL ASSY, ignition lower	1	-	
5	33445-95301	STAY, ignition coil	2	-	
6	33416-95300-01J	STAY, ignition coil	-	1	
7	01107-06168	BOLT	4	-	
8	01107-06208	BOLT	-	2	
9	01107-06128	BOLT	-	1	
10	08321-21068	LOCK WASHER	4	3	
11	08321-21068	LOCK WASHER	2	-	DT50MG(E1,E3,E9,E13, E28) DT50MJ(E3,E9,E13,E28) DT50MVZ(E1,E7,E13, E28,E40)
12	01107-06258	BOLT	2	-	
13	33542-98000	SEAL, high tension cord	2	2	
14	33510-22010	CAP, spark plug	2	2	
15	33510-95510	CAP, spark plug DT50G(E9,E13), DT50MG(E9,E13),DT65G(E9,E13) DT50JE3,DT50WJ(E9,E13), DT50MJ(E3,E9,E13) DT65J(E3,E9,E13) DT50VZE7,DT50WVZ(E13,E40), DT50MVZ(E7,E13,E40) DT65VZ(E7,E13,E40)	2	2	
16	33541-93310	SEAL, spark plug	2	2	
17	09482-00230	SPARK PLUG (NGK,BR8HS gap:0.9)	2	2	from 09482-00150 model G model J/VZ(E28), DT50MVZ E28
18	09482-00151	SPARK PLUG (NGK, B8HS gap:0.9)	2	2	model J/VZ DT50G(E9,E13) DT50MG(E9,E13) DT65G(E9,E13)
19-1	09404-06402	CLAMP, ignition coil	-	1	to 09404-06412
19-2	09404-06412	CLAMP, ignition coil	1	1	
20	09408-00012	CLAMP	1	(1)	(model G)

DT50, DT65

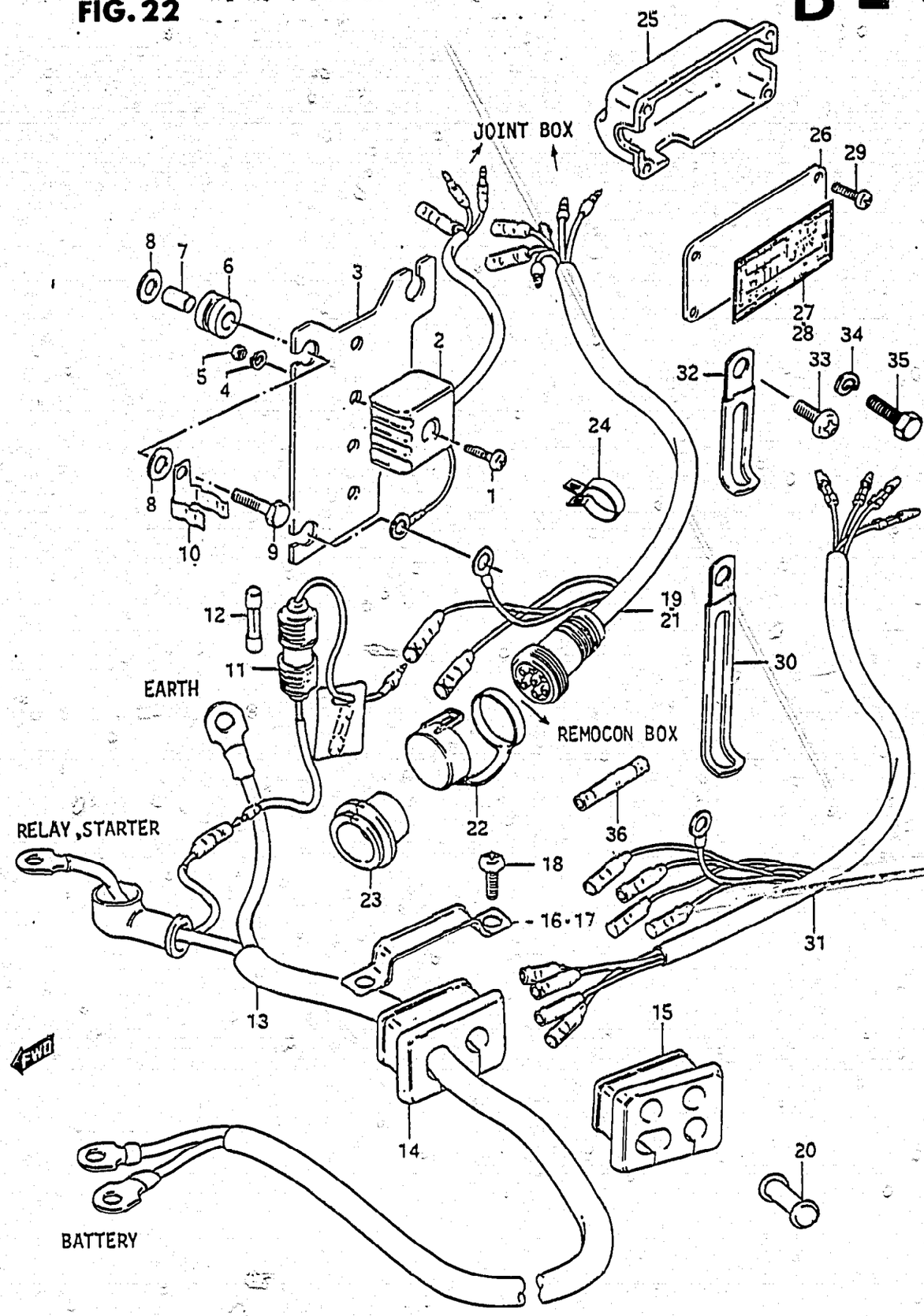

FIG.22 ELECTRICAL (1)

Ref. No.	Part No.	Description	Q'ty 50	Q'ty 65	Remarks
1	02112-05258	SCREW	1	1	
2	32800-95720	RECTIFIER ASSY	1	1	
3-1	32890-95200	HOLDER, electric parts	1	1	model G
3-2	32890-95201	HOLDER, electric parts	1	1	from 32890-95200
4	08321-21058	LOCK WASHER	1	1	
5	08310-11058	NUT	1	1	
6	09320-08015	CUSHION	3	3	
7	09180-06035	SPACER (6.1x8x12)	3	3	
8	09160-06052	WASHER	3	3	
9	01107-06258	BOLT	3	3	
10	36791-95200	HOLDER, fuse case	1	1	
11-1	36740-95251	CASE ASSY, fuse	1	1	model G
11-2	36740-95252	CASE ASSY, fuse	1	1	from 36740-95251
12	09481-20001	·FUSE (20A)	1	1	
13-1	33810-95251	CABLE ASSY, starting motor	1	1	to 33810-95252
13-2	33810-95252	CABLE ASSY, starting motor	1	1	model G
13-3	33810-95253	CABLE ASSY, starting motor	1	1	from 33810-95252
14	36656-95200	GROMMET, wiring harness	1	1	model G
15-1	36656-95500	GROMMET, wiring harness	1	1	model J
15-2	36656-95501	GROMMET, wiring harness	1	1	model VZ
16	36659-95200	CLAMP, wiring harness L:76	1	1	model G
17	36659-95500	CLAMP, wiring harness L:86	1	1	
18	09125-06022	SCREW	2	2	
19	36610-95252	WIRING HARNESS (model G)	1	1	DT50M→Ref.No.31
20-1	36661-95210	CAP, grommet	3	3	model J/VZ
20-2	36661-95210	CAP, grommet	1	1	model TVZ
21	36630-95200	WIRING HARNESS, remote control	1	1	6501-101644~
22	36631-94300	·CAP	1	1	
23	36612-94301	GROMMET, harness connector	1	1	model J/VZ
24	36632-95501	CLAMP, connector grommet	1	1	

DT50, DT65

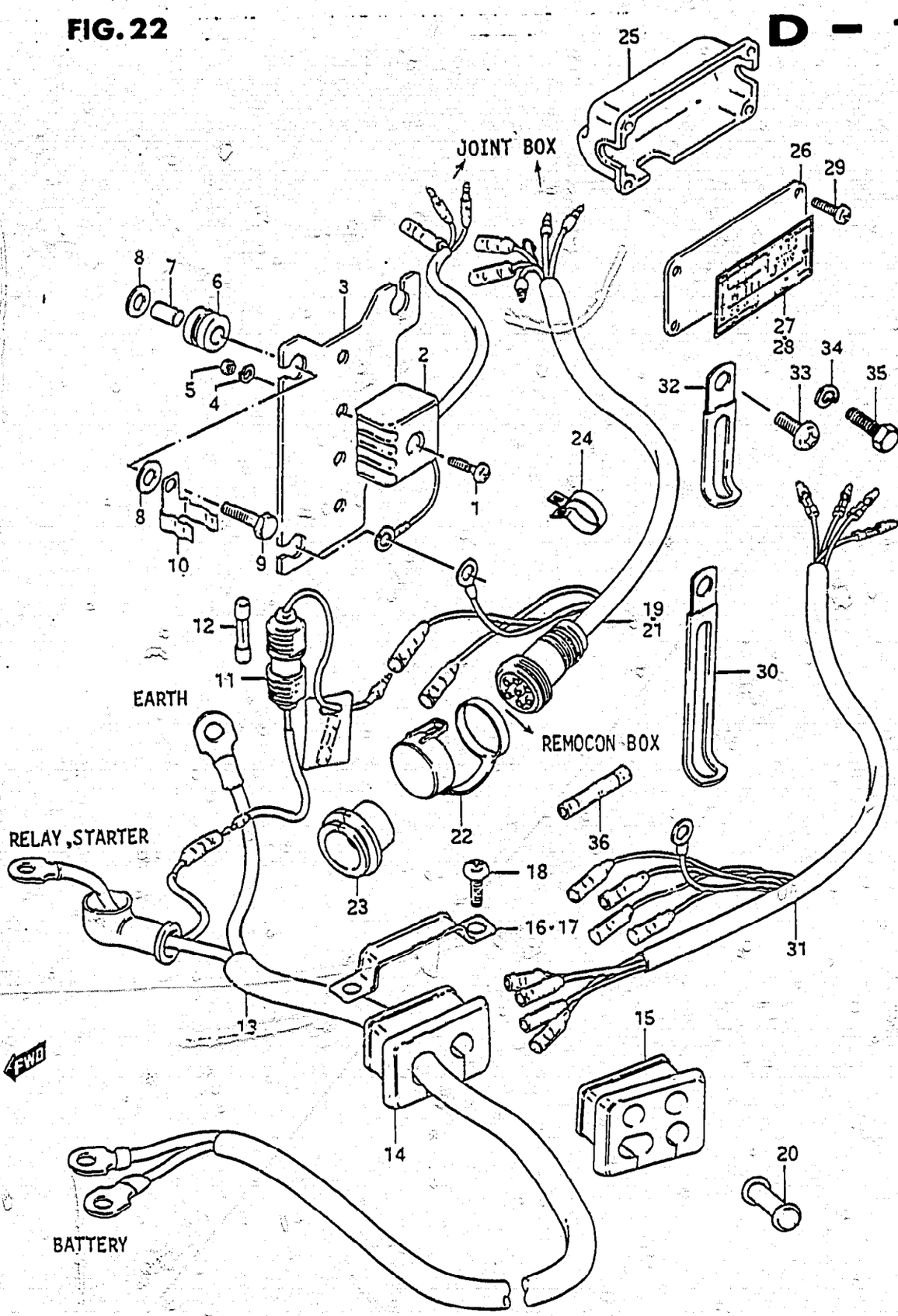

FIG.22 ELECTRICAL (1)

Ref. No.	Part No.	Description	Q'ty 50	Q'ty 65	Remarks
25	36653-95300	BOX, joint	1	1	
26	36650-95201	COVER, joint box	1	1	
27-1	36652-95202	LABEL, joint diaphragm	1	-	to 36652-95203
27-2	36652-95203	LABEL, joint diaphragm	1	-	
28	36652-95300	LABEL, joint diaphragm	-	1	
29	09125-06020	SCREW	4	4	
30	09404-08414	CLAMP, wiring harness	1	1	model G
31	36610-95200	WIRING HARNESS	1	-	DT50MG(E1,E3,E9,E13, E28)
32	09404-06412	CLAMP	1	-	
33	02112-06088	SCREW (model G)	1	-	DT50MJ(E3,E9,E13,E28)
34	08321-21068	LOCK WASHER	1	-	DT50MVZ(E1,E7,E13, E28,E40)
35	01107-06108	BOLT	1	-	
36	37132-93700	CONNECTOR, wire	(1)	-	(OPT)

FIG. 23

D - 12

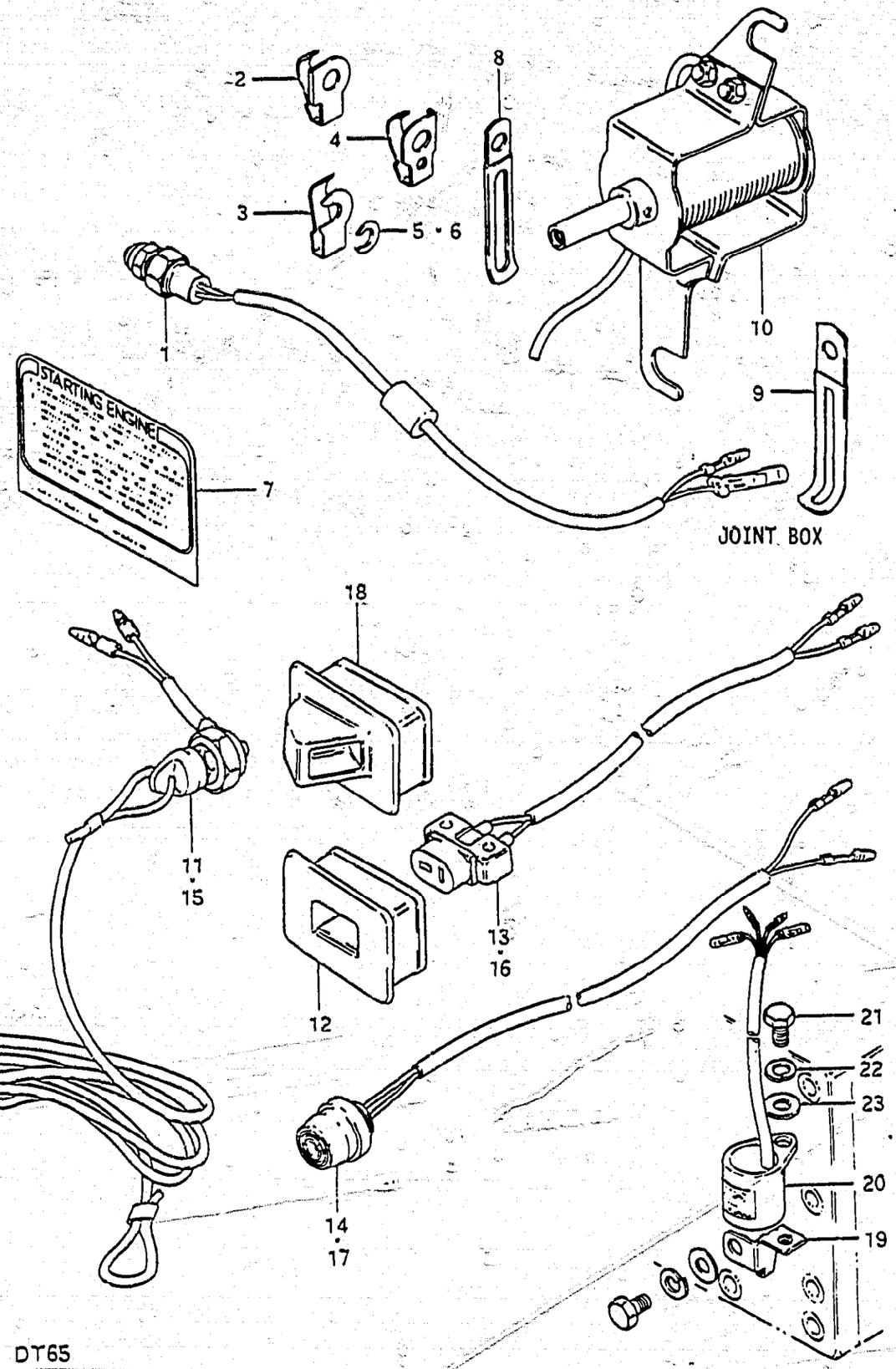

FIG.23 ELECTRICAL (2)

Ref. No.	Part No.	Description	Q'ty 50	Q'ty 65	Remarks
1	37721-95252	SWITCH ASSY, neutral	1	1	from 37721-95251
2-1	37725-94300	ACTUATOR, neutral switch	1	-	to 37725-94301
2-2	37725-94301	ACTUATOR, neutral switch	1	-	model G,DT50M(JE3, JE28,VZE1,VZE28)
3-1	37725-95201	ACTUATOR, neutral switch	-	1	to 37725-94301
3-2	37725-94301	ACTUATOR, neutral switch	-	1	
4	37725-95300	ACTUATOR, neutral switch	1	1	model J/VZ
5	37726-95200	SHIM, neutral switch	AR(0~2)		T:1.0
6	37727-95200	SHIM, neutral switch	AR(0~2)		T:0.5
7	37149-95300	MARK, starter indicator	1	1	
8	09404-06412	CLAMP, choke solenoid	1	1	
9	09404-06412	CLAMP, neutral switch	1	1	
10	38500-95251	SOLENOID ASSY, choke	1	1	
11-1	37820-95252	SWITCH ASSY, emergency	1	-	from 37820-95252
11-2	37820-95253	SWITCH ASSY, emergency	1	-	to 36656-95210
12-1	39611-95200	GROMMET, socket	1	-	DT50MG(E1,E3,E9, E13,E28)
12-2	36656-95210	GROMMET, socket	1	-	
13	39601-96711	SOCKET ASSY, lamp	1	-	
14	37800-93150	SWITCH ASSY, stop	1	-	
15	37820-95253	SWITCH ASSY, emergency	1	-	DT50MJ(E3,E9,E13,E28) DT50MVZ(E1,E7,E13, E28,E40)
16-1	39601-96711	SOCKET ASSY, lamp	1	-	
16-2	39601-96712	SOCKET ASSY, lamp from 39601-96711	1	-	
17	37800-93150	SWITCH ASSY, stop	1	-	
18	36656-95300	GROMMET, socket	1	-	DT50MJ(E3,E9,E13,E28) DT50MVZ(E1,E7,E13, E28,E40)
19	37321-95200-01J	STAY, N.S.I. unit	1	-	DT50MJ (E3,E28) DT50MVZ(E1,E28)
20	37320-94300	N.S.I. unit	1	-	
21	01107-06128	BOLT	1	-	
22	08321-21068	LOCK WASHER	1	-	
23	08322-21068	WASHER	1	-	

FIG. 24

D - 13

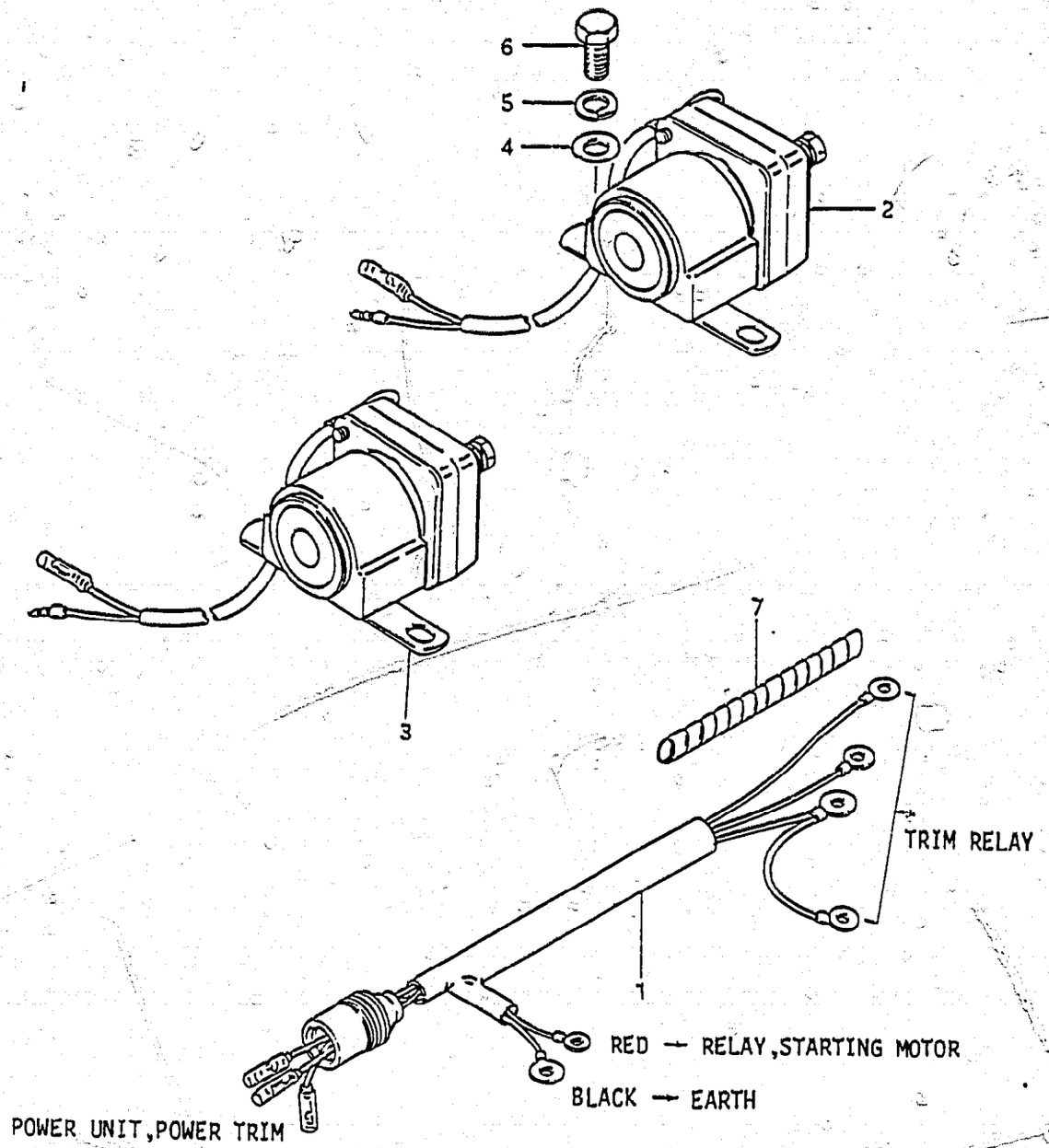

FIG.24 ELECTRICAL (TVZ)

Ref. No.	Part No.	Description	Q'ty 50/65	Remarks
1	33830-95202	CABLE, trim relay	1	
2	38410-95540	TRIM RELAY, up in	1	
3	38420-95540	TRIM RELAY, down in	1	
4	09160-06015	WASHER	4	
5	09162-06001	LOCK WASHER	4	
6	09100-06019	BOLT	4	
7	38423-95501	TUBE	3	L:150 2pcs,L:150→100

DT50, DT65

FIG. 25

E - 2

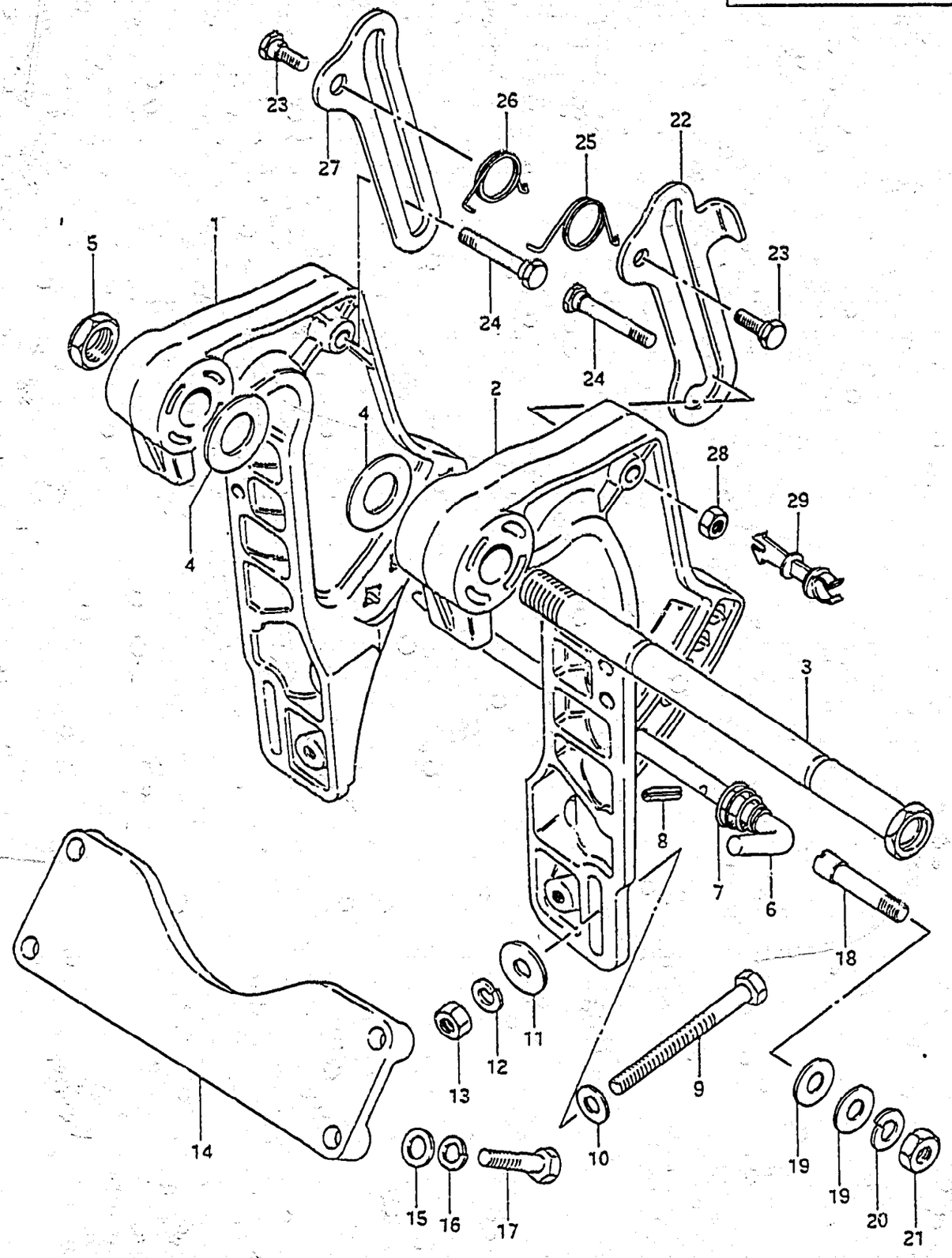

DT50, DT65

FIG.25 CLAMP BRACKET (1)

Ref. No.	Part No.	Description	Q'ty 50/65	Remarks
1	41111-95203-01J	BRACKET, clamp RH	1	
2-1	41121-95203-01J	BRACKET, clamp LH model G	1	to 41121-95210-01J
2-2	41121-95210-01J	BRACKET, clamp LH	1	
3	41130-95500	SHAFT, clamp bracket	1	
4	09161-22001	WASHER	2	
5	09159-22002	NUT	1	
6	45421-95200	PIN	1	
7	09441-21002	SPRING, tilt lock pin	1	
8	09205-03015	PIN (8x18)	1	
9	09100-10113	BOLT, transom (10x100)	4	
10	09160-10040	WASHER (10.5x19x2)	4	
11	09160-10050	WASHER (10.5x30.3x2)	4	
12	09162-10002	LOCK WASHER	4	
13	09140-10015	NUT	4	
14	41311-95300-01J	PLATE, clamp bracket	1	
15	09160-10040	WASHER	4	
16	09162-10002	LOCK WASHER	4	
17	09100-10123	BOLT	4	
18	48211-95500	PIN	2	
19	09160-12038	WASHER	4	OPT TVZ···STD
20	09162-12002	LOCK WASHER	2	
21	09140-12020	NUT	2	
22	41222-95201-01J	ARM, tilt lock	1	from 41222-95201
23	09111-12002	BOLT, tilt lock arm	2	
24	09111-10015	BOLT, tilt lock arm clamp	2	
25	09448-27006	SPRING, tilt lock arm	1	
26	09448-27007	SPRING, tilt stop arm	1	
27	41223-95201-01J	ARM, tilt stop	1	from 41223-95201
28	09140-10015	NUT	2	
29	33835-95500	CLAMP, PTT motor cable	1	OPT TVZ···STD

FIG.26

E - 3

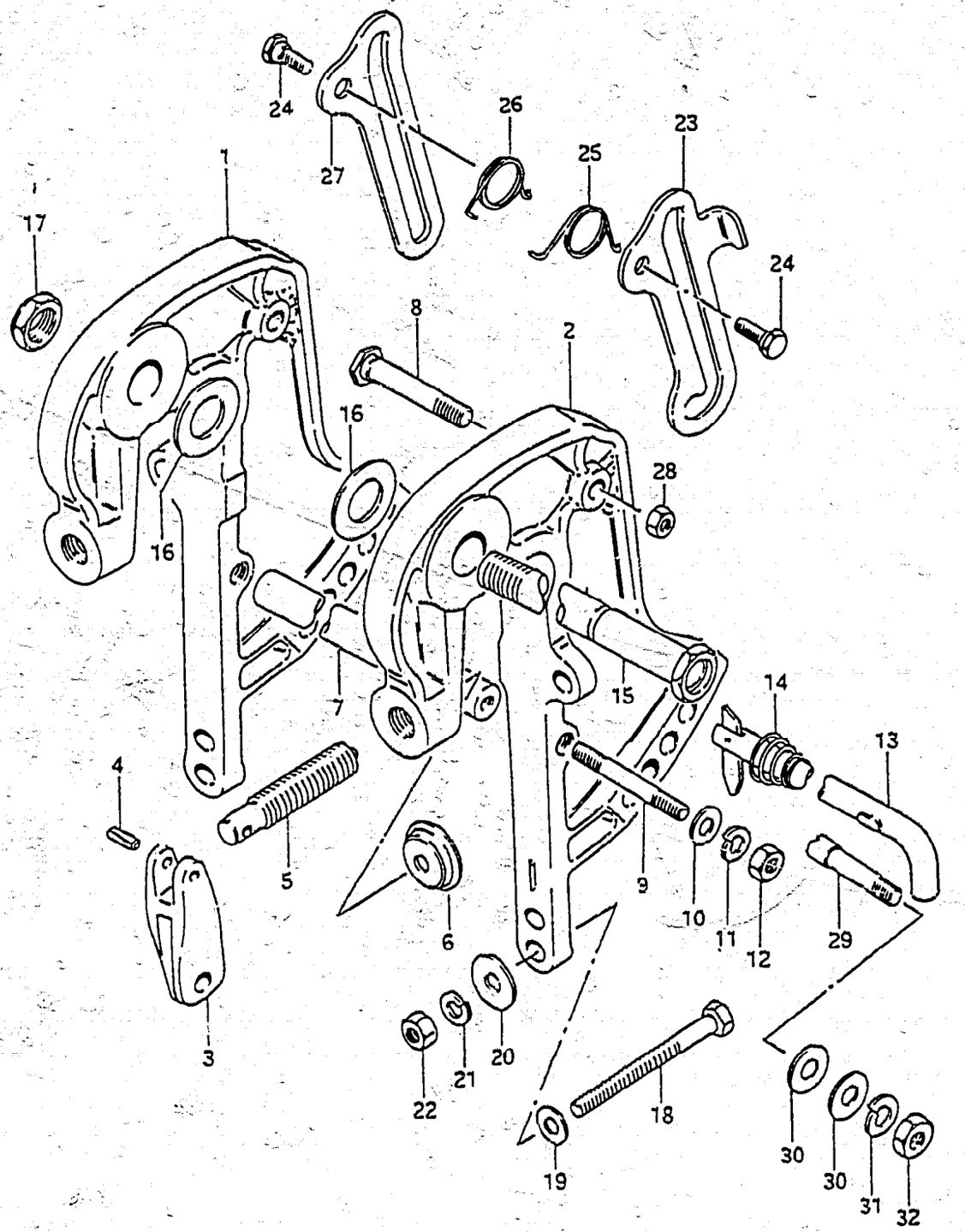

FIG.26 CLAMP BRACKET (2)

Ref. No.	Part No.	Description	Q'ty 50/65	Remarks
		(DT50G (E9, E13), DT50MG (E1, E3, E9, E13, E28))		
		(DT65G (E9, E13))		
		(DT50WJ (E9, E13), DT50MJ (E3, E9, E13, E28))		
		(DT65J (E9, E13))		
		(DT50VZE7)		
		(DT50WVZ (E13, E40), DT50MVZ (E1, E7, E13, E28, E40))		
		(DT65VZ (E7, E13, E40))		
1-1	41111-95221-01J	BRACKET, clamp RH	1	model G
1-2	41110-95300-01J	BRACKET, clamp RH	1	model J/VZ
2-1	41121-95220-01J	BRACKET, clamp LH	1	model G
2-2	41120-95300-01J	BRACKET, clamp LH	1	model J/VZ
3	41212-93000-01J	HANDLE, clamp	2	
4	09205-06007	PIN, clamp handle	2	
5	41211-94300	SCREW, clamp	2	
6	41213-93001	PLATE, clamp	2	
7	41311-95220-01J	ROD, clamp bracket	1	L:197
8	09111-10018	BOLT	2	L:64.3
9	09108-08063	STUD BOLT	2	
10	09160-08015	WASHER	2	8.5x16x1.6
11	09162-08003	LOCK WASHER	2	
12	09140-08003	NUT	2	
13	45420-95220	PIN, tilt lock	1	
14	09441-21002	SPRING	1	
15	41130-95500	SHAFT, clamp bracket	1	
16	09161-22001	WASHER	2	
17	09159-22002	NUT	1	
18-1	09100-10113	BOLT, transom (10x100)	2	
18-2	09100-10175	BOLT, transom (10x100)	2	DT50(VZE7,MVZE7), DT65VZE7
19	09160-10040	WASHER	2	10.5x19x2
20	09160-10050	WASHER	2	10.5x30.3x2
21	09162-10002	LOCK WASHER	2	
22	09140-10015	NUT	2	

DT50, DT65

FIG. 26

E - 4

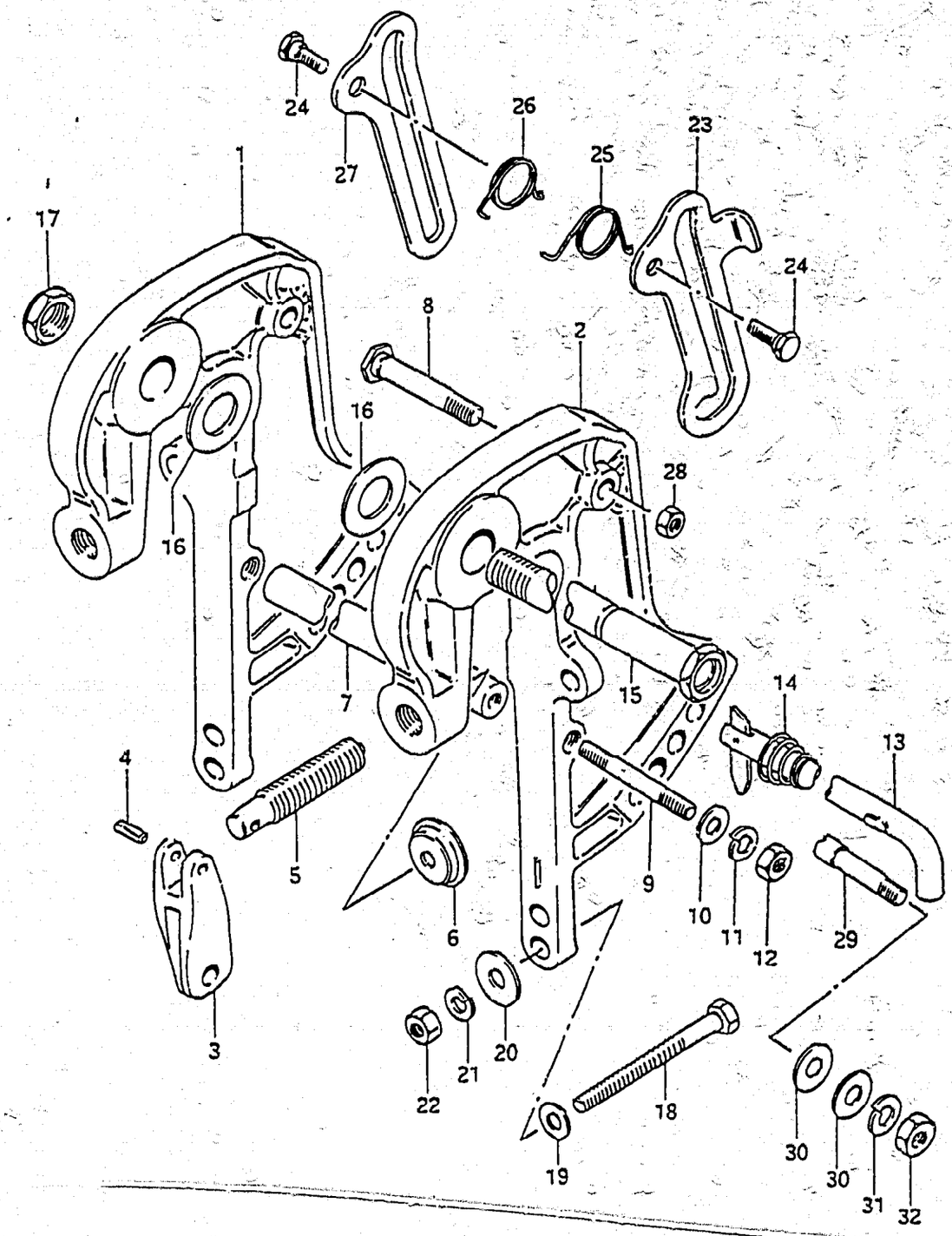

FIG.26 CLAMP BRACKET (2)

Ref. No.	Part No.	Description	Q'ty 50/65	Remarks
		(DT50G (E9, E13), DT50MG (E1, E3, E9, E13, E28))		
		(DT65G (E9, E13))		
		(DT50WJ (E9, E13), DT50MJ (E3, E9, E13, E28))		
		(DT65J (E9, E13))		
		(DT50VZ E7)		
		(DT50WVZ (E13, E40), DT50MVZ (E1, E7, E13, E28, E40))		
		(DT65VZ (E7, E13, E40))		
23	41222-95201-01J	ARM, tilt lock	1	
24	09111-12002	BOLT, tilt lock arm	2	
25	09448-27006	SPRING, tilt lock arm	1	
26	09448-27007	SPRING, tilt stop arm	1	
27	41223-95201-01J	ARM, tilt stop	1	
28	09140-10015	NUT	2	
29	48211-95500	PIN	2	
30	09160-12038	WASHER	4	OPT
31	09162-12002	LOCK WASHER	2	
32	09140-12020	NUT	2	

DT50, DT65

FIG. 27

E - 5

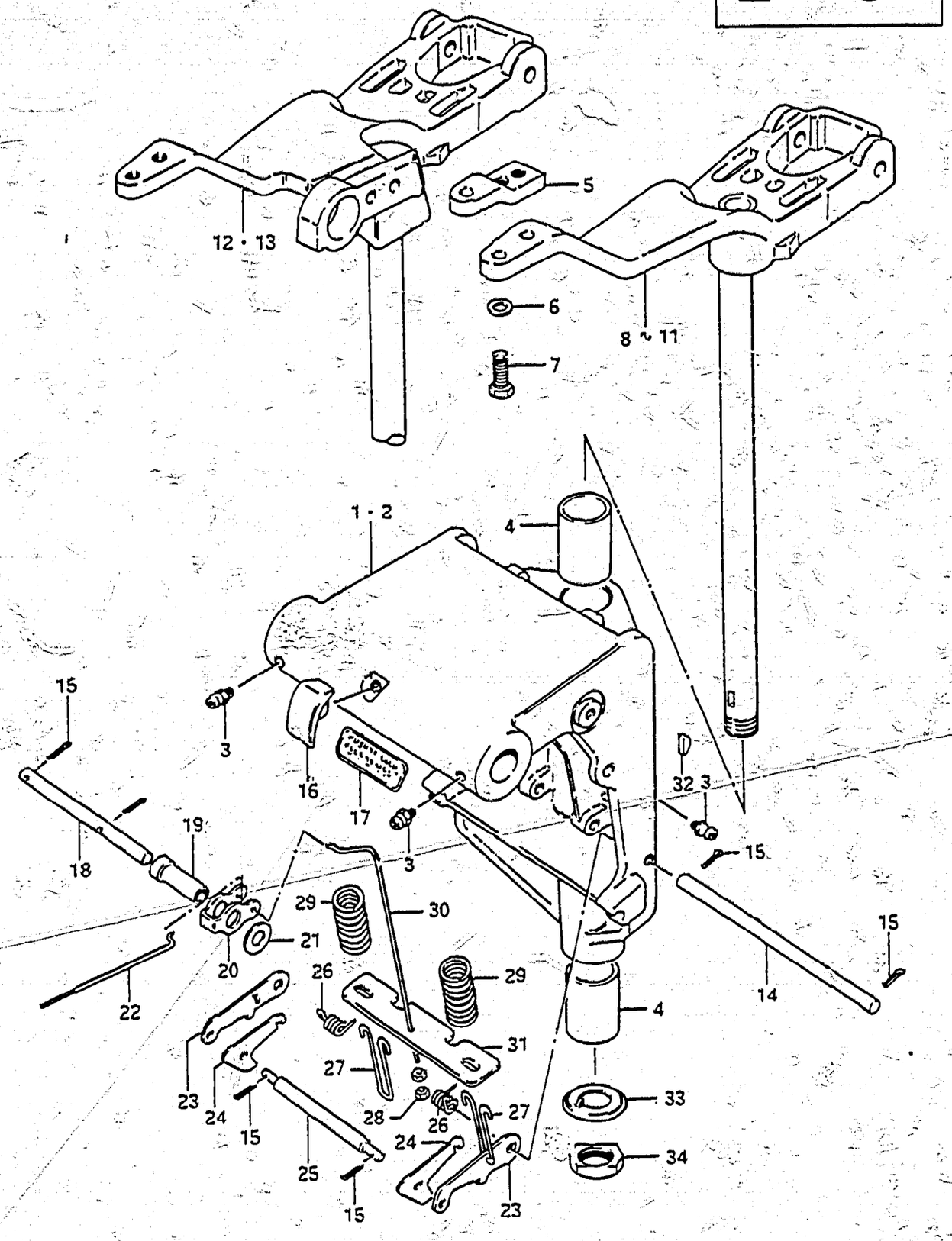

DT50, DT65

FIG.27 SWIVEL BRACKET

Ref. No.	Part No.	Description	Q'ty 50/65	Remarks
1	43111-95203-01J	BRACKET, swivel (L type)	1	
2	43111-95703-01J	BRACKET, swivel (S type)	1	
3	22511-99000	GREASE NIPPLE	3	
4-1	09306-26003	BUSHING, steering	2	
4-2	09306-26005	BUSHING, steering	2	
5	43755-95220-01J	ATTACHMENT, bracket	1	DT50G/WJ(E9,E13) DT50VZE7,DT50WVZ (E13,E40),DT65G/J (E9,E13),DT65VZ(E7, E13,E40)
6	09160-10040	WASHER	2	
7	09100-10153	BOLT (10x30)	2	
8	43750-95202-01J	BRACKET, steering (L type)	1	
9	43750-95221-01J	BRACKET, steering (L type)	1	DT50G/J/VZ(E3,E28)
10	43750-95702-01J	BRACKET, steering (S type)	1	DT65G/J/VZ(E3,E28)
11	43750-95721-01J	BRACKET, steering (S type)	1	
12-1	43750-95210-01J	BRACKET, steering (L type)	1	DT50MG(E1,E3,E9,E13 E28)
12-2	43750-95211-01J	BRACKET, steering (L type)	1	
13-1	43750-95710-01J	BRACKET, steering (S type)	1	DT50MJ(E3,E9,E13,E28)
13-2	43750-95711-01J	BRAKCET, steering (S type)	1	DT50MVZ(E1,E7,E13, E28,E40)
14	45245-95200	SHAFT, reverse lock arm	1	
15	09204-01001	COTTER PIN	6	
16	45261-95201	KNOB, release	1	
17	43241-95201	MARK, release knob	1	
18	45254-95200	SHAFT, release arm (8x73)	1	
19	09180-08082	SPACER	1	
20	45253-95200	ARM, release	1	
21	09160-08015	WASHER (8.5x16x1.2)	1	
22	45251-95200	ROD, release	1	

FIG. 27

E - 6

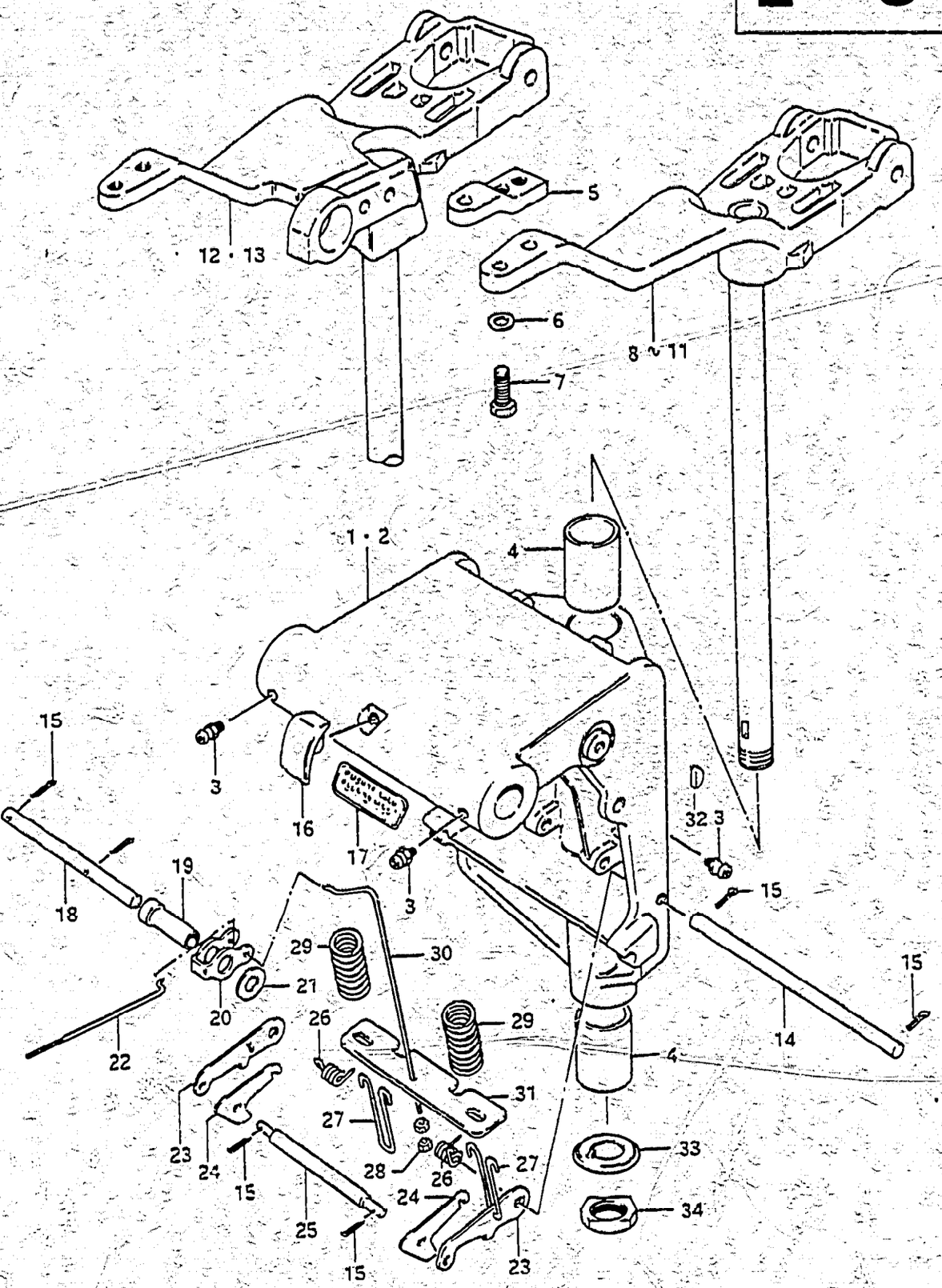

FIG.27 SWIVEL BRACKET

Ref. No.	Part No.	Description	Q'ty 50/65	Remarks
23	45241-95200	LINK, reverse lock arm	2	
24	45231-95200	ARM, reverse lock	2	
25	45243-95200	PIN, reverse lock arm	1	
26	09444-12001	SPRING, lock arm shaft	2	
27	45244-95200	STOPPER, reverse lock arm	2	
28	09140-03002	NUT	2	
29	09440-20007	SPRING, reverse lock arm	2	
30	45252-95200	LINK, release lever	1	
31-1	45242-95200	PLATE, reverse lock arm	1	
31-2	45242-95201	PLATE, reverse lock arm	1	from 45242-95200
32	09420-05003	KEY, pilot shaft	1	
33	09166-25004	WASHER, pilot shaft	1	
34	09140-24008	NUT, pilot shaft	1	

DT50, DT65

FIG. 28

E - 7

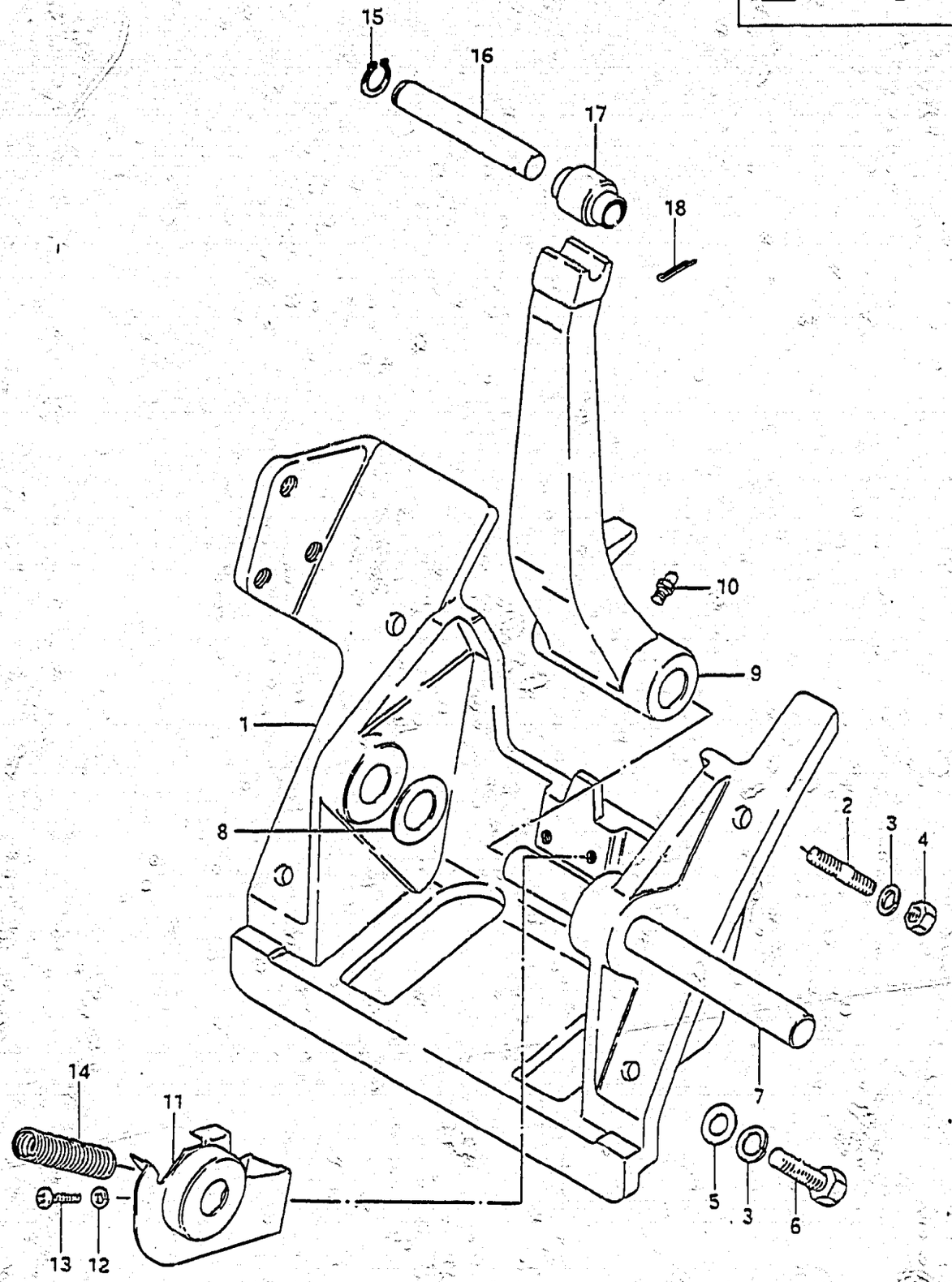

FIG. 28 CYLINDER SUPPORT (TVZ)

Ref. No.	Part No.	Description	Q'ty 50/65	Remarks
1	48111-95501-01J	BRACKET, cylinder support	1	
2	09108-10035	STUD BOLT	2	
3	09162-10002	LOCK WASHER	4	
4	09140-10015	NUT	2	
5	09160-10040	WASHER (10.5x18x1.6)	2	
6	09100-10123	BOLT (10x35)	2	
7	48121-95500	SHAFT, cylinder	1	
8	09160-15026	WASHER (15x30x2)	2	
9	48161-95502-01J	ARM, trailering lock	1	
10	22511-99000	GREASE NIPPLE	1	
11	48165-95502	STOPPER, lock arm	1	
12	09162-05002	LOCK WASHER	1	
13	09125-05025	SCREW	1	
14	09440-11011	SPRING	1	
15	09380-12002	CIRCLIP	2	
16	48321-95500	PIN, piston rod	2	
17	09319-12020	BUSHING	2	
18	09204-01002	COTTER PIN	2	

DT50, DT65

FIG. 29

E - 8

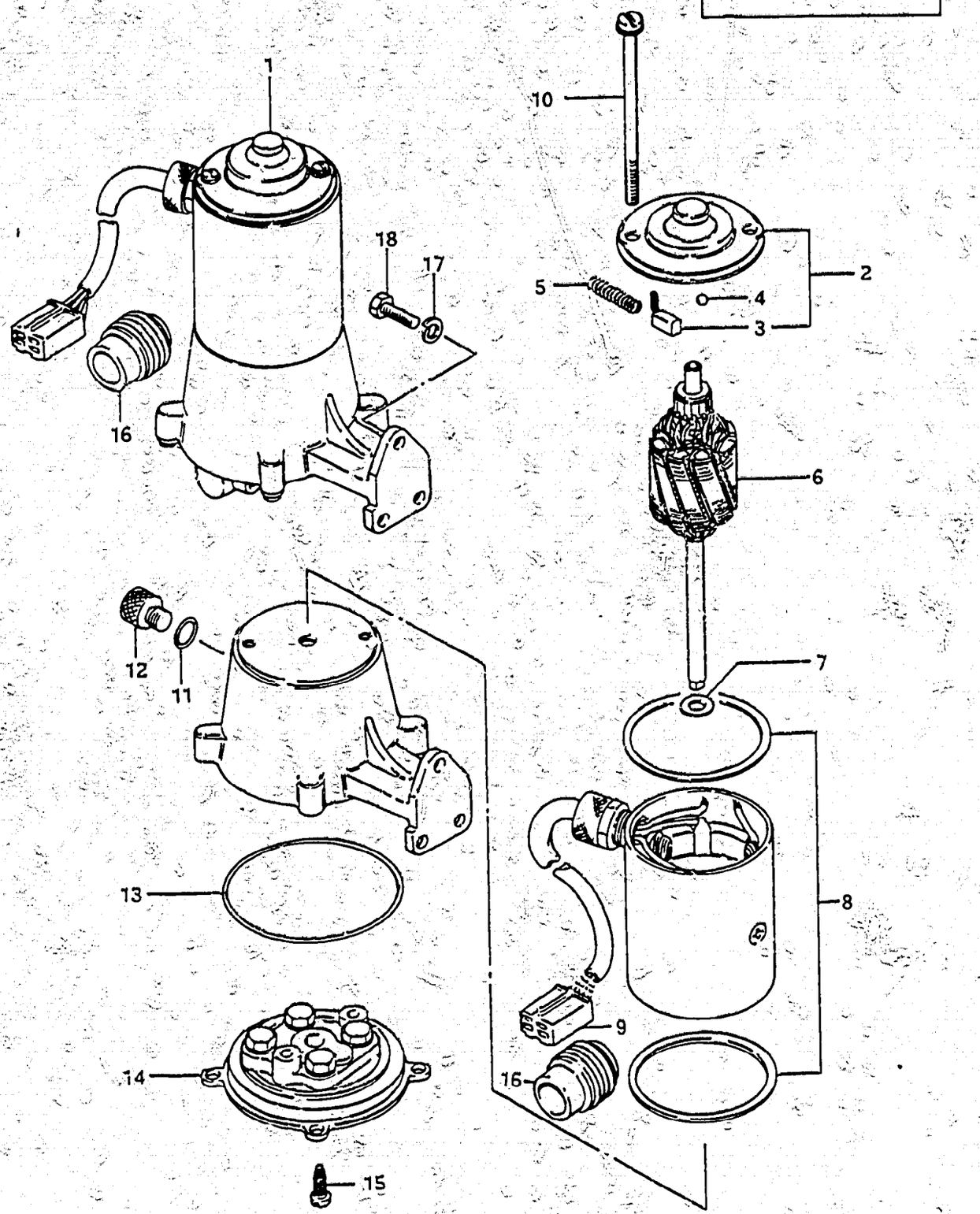

40

FIG.29 POWER UNIT (TVZ)

Ref. No.	Part No.	Description	Q'ty 50/65	Remarks
1	48500-95510-01J	POWER UNIT, power trim	1	Change 48528-95500 to 33836-94501
2	48510-95500	·HEAD ASSY, motor	1	
3	48533-95500	··BRUSH SET	1	
4	06111-05004	·BALL	1	
5	48535-95500	·SPRING SET	1	
6	48540-95500	·ARMATURE	1	
7	48531-95500	·THRUST WASHER SET	1	
8	48537-95500	·GASKET SET	1	
9	48528-95500	·CONNECTOR, harness	1	
10	48550-95500	·BOLT SET	1	
11	09280-08006	·O RING	1	
12	48573-95500	·CAP	1	
13	48585-95500	·O RING	1	
14	48502-95500	·VALVE BODY	1	
15	48591-95500	·SCREW	4	
16	33836-94501	·CAP, motor cable	1	
17	09162-08003	LOCK WASHER	3	
18	09100-08154	BOLT (8x22)	3	

FIG. 30

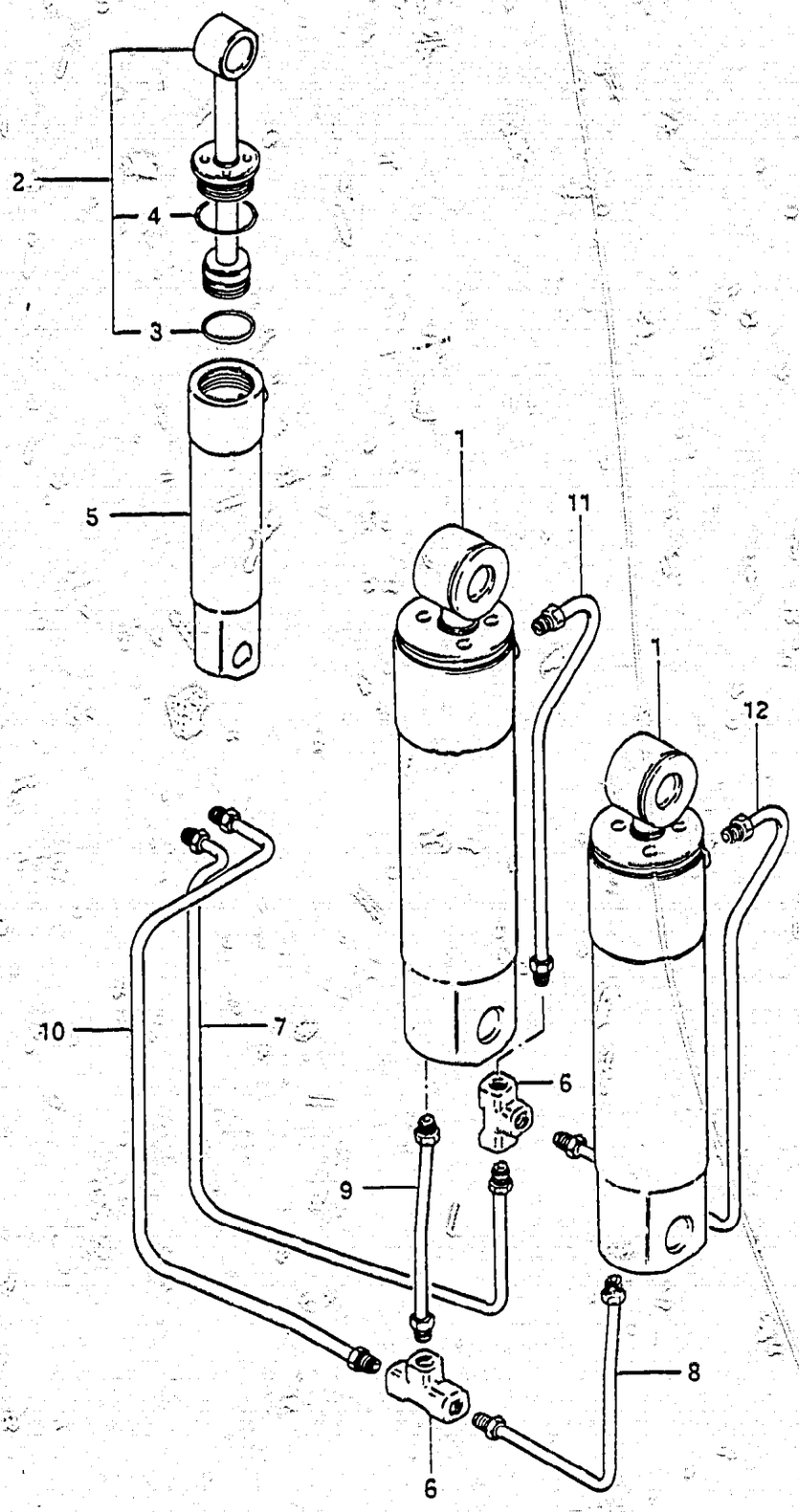

FIG.30 TRIM CYLINDER (TVZ)

Ref. No.	Part No.	Description	Q'ty 50/65	Remarks
1	48600-95510-01J	TRIM CYLINDER ASSY	2	
2	48601-95510	·PISTON	2	
3	48627-95510	·O RING, piston	2	
4	48633-95510	·O RING, head	2	
5	48641-95510	·TUBE, cylinder	2	
6	48711-95510	CONNECTOR, three way	2	
7	48720-95510	TUBE, inlet (1)	1	
8	48730-95510	TUBE, inlet (2)	1	
9	48740-95510	TUBE, inlet (3)	1	
10	48750-95510	TUBE, outlet (1)	1	
11	48760-95510	TUBE, outlet (2)	1	
12	48770-95510	TUBE, outlet (3)	1	

FIG.31

E - 10

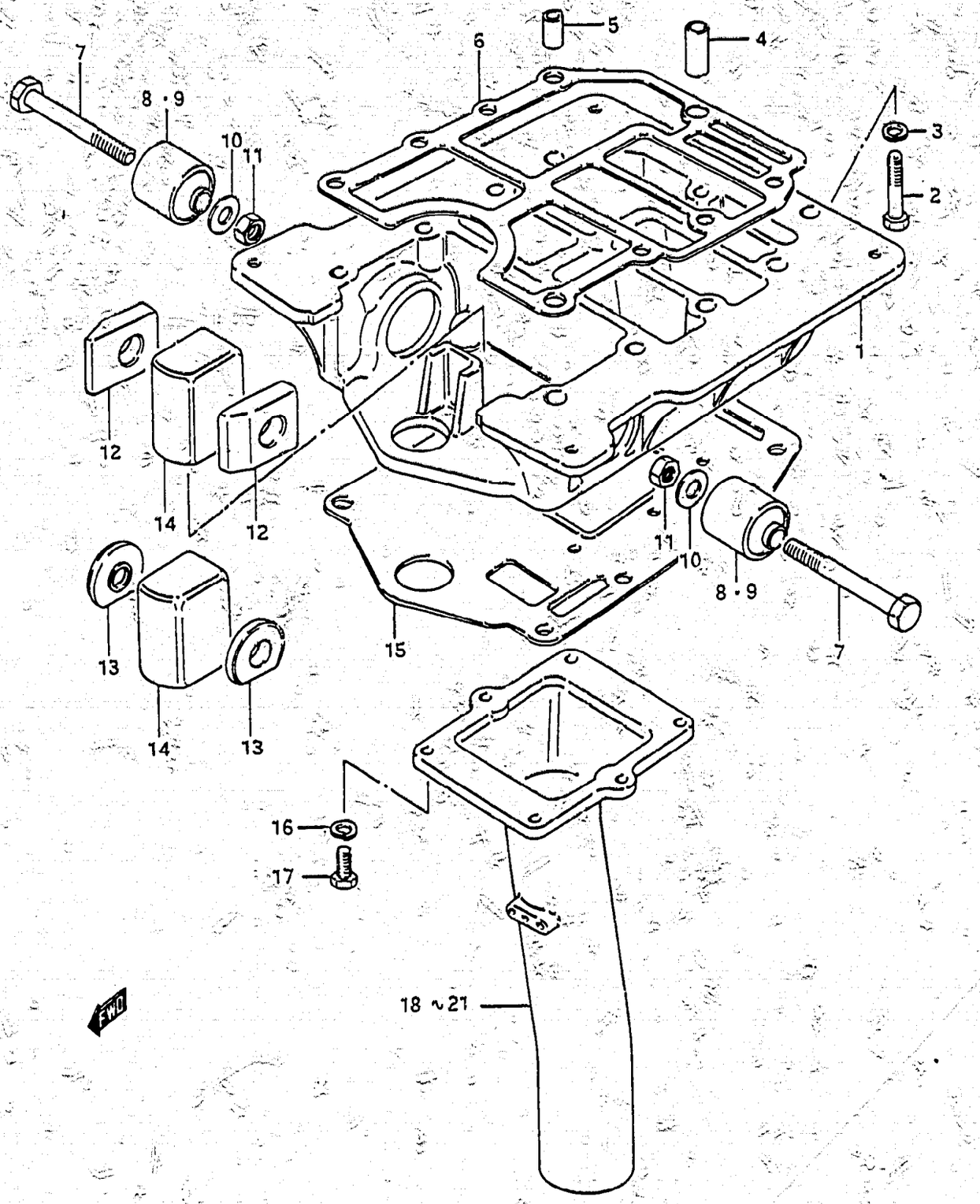

FIG.31 ENGINE HOLDER

Ref. No.	Part No.	Description	Q'ty 50	Q'ty 65	Remarks
1-1	51111-95202-01J	HOLDER, engine	1	1	model G
1-2	51111-95203-01J	HOLDER, engine	1	1	
2-1	09100-08100	BOLT (8x35)	2	2	
2-2	09100-08163	BOLT (8x35)	2	2	
3	09162-08003	LOCK WASHER	2	2	
4	09206-11005	COLLAR, holder (8.4x11x20)	1	1	
5	09205-11001	DOWEL PIN (11x14)	2	2	
6-1	51211-95201	GASKET, engine holder	1	1	to 51211-95202
6-2	51211-95202	GASKET, engine holder	1	1	
7	09100-10112	BOLT, upper mounting (10x70)	2	2	
8	54130-95201	MOUNTING, upper	2	2	
9	54130-95500	MOUNTING, upper DT50G (E9,E13), DT50MG (E1,E3,E9,E13,E28) DT65G (E9,E13) DT50WJ (E9,E13), DT50MJ (E3,E9,E13,E28) DT65J (E9,E13) DT50VZ E7 DT50WVZ (E13,E40), DT50MVZ (E1,E7,E13,E28,E40) DT65VZ (E7,E13,E40)	2	2	
10	09160-10040	WASHER (10.5x19x2)	2	2	
11	09140-10015	NUT	2	2	
12	54136-95200	STOPPER, upper mounting	2	2	
13	54136-95501	STOPPER, upper mounting DT50G (E9,E13), DT50MG (E9,E13) DT65G (E9,E13) DT50WJ (E9,E13), DT50MJ (E3,E9,E13,E28) DT65J (E9, E13) DT50VZ E7 DT50WVZ (E13,E40), DT50MVZ (E1,E7,E13,E28,E40) DT65VZ (E7,E13,E40)	2	2	
14	54135-95200	MOUNTING, upper thrust	1	1	
15	52113-95204	GASKET, driveshaft housing	1	1	
16	09162-06001	LOCK WASHER	6	6	
17	09100-06020	BOLT, exhaust tube (6x20)	6	6	
18	14211-95200	TUBE, exhaust (L type)	1	-	
19	14211-95210	TUBE, exhaust (S type)	1	-	
20	14211-95302	TUBE, exhaust (L type)	-	1	from 14211-95301
21	14211-95312	TUBE, exhaust (S type)	-	1	from 14211-95311

E - 11

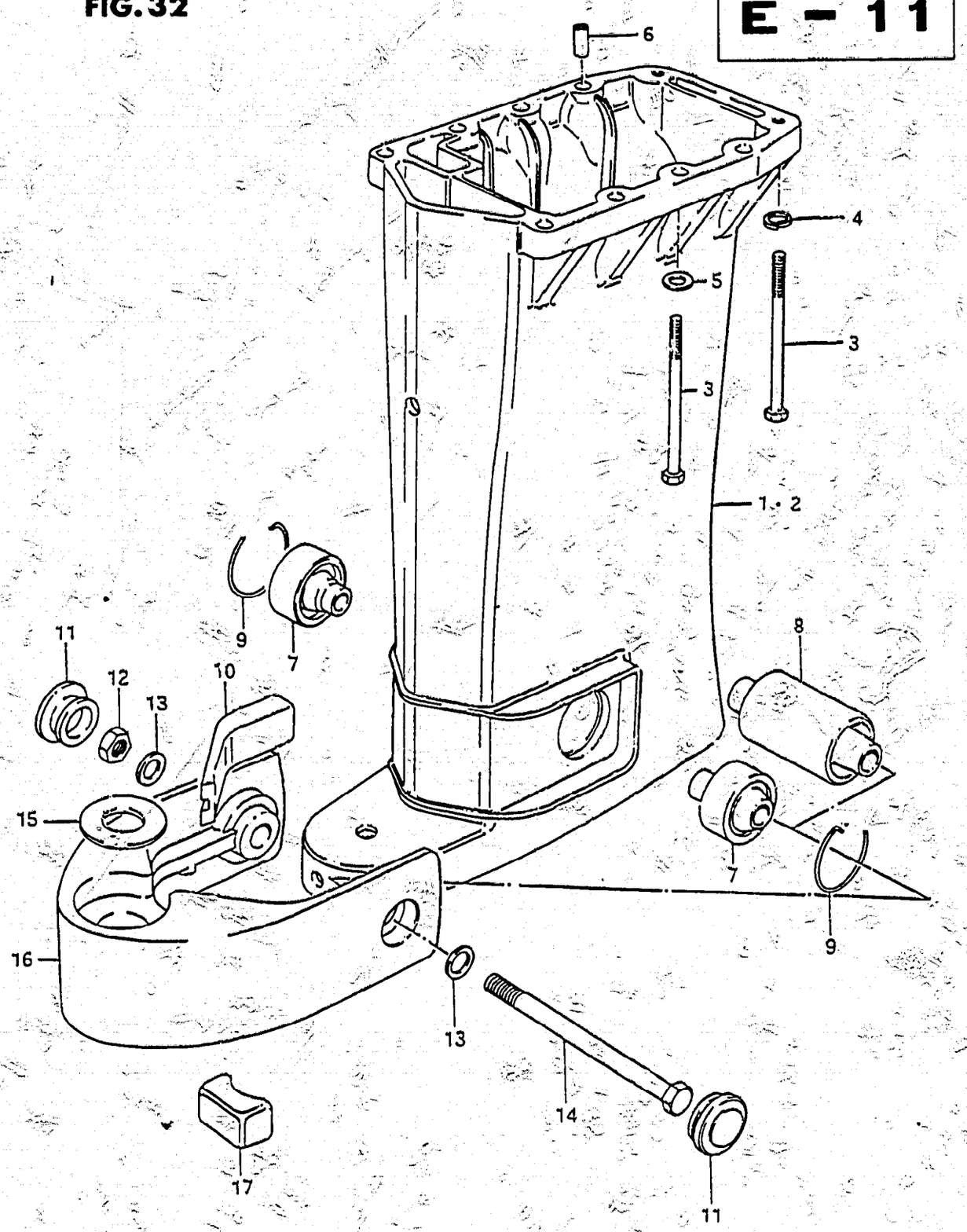

FIG.32 DRIVESHAFT HOUSING

Ref. No.	Part No.	Description	Q'ty 50/65	Remarks
1-1	52111-95204-01J	HOUSING, driveshaft (L type)	1	to 52111-95205-01J
1-2	52111-95205-01J	HOUSING, driveshaft (L type)	1	model G
1-3	52111-95210-01J	HOUSING, driveshaft (L type)	1	model J/VZ
2-1	52111-95703-01J	HOUSING, driveshaft (S type)	1	to 52111-95704-01J
2-2	52111-95704-01J	HOUSING, driveshaft (S type)	1	model G 5001-002096~ 5002-001446~ 6501-001967~ 6502-002383~
2-3	52111-95710-01J	HOUSING, driveshaft (S type)	1	model J/VZ
3	09100-08136	BOLT, driveshaft housing	8	8x55
4	09162-08003	LOCK WASHER	7	
5	09160-08015	WASHER (8.5x16x1.2)	1	
6	09205-11001	DOWEL PIN	2	
7	54160-95200	MOUNTING, lower	2	
8	54160-95500	MOUNTING, lower DT50G (E9,E13), DT50MG (E1,E3,E9,E13,E28) DT65G (E9,E13) DT50WJ (E9,E13), DT50MJ (E3,E9,E13,E28) DT65J (E9,E13) DT50VZ E7 DT50WVZ (E13,E40), DT50MVZ (F1,E7,E13,E28,E40) DT65VZ (E7,E13,E40)	1	
9	09387-46001	CLIP, mounting set	2	
10	54167-95500	MOUNT, lower side	2	
11	09250-28001	CAP, lower mounting bracket	2	
12	09140-12020	NUT, lower mounting	1	
13	09160-12033	WASHER (12.5x22x2.5)	2	
14	09100-12019	BOLT, lower mounting	1	12x145
15	09160-25025	WASHER, pilot shaft	1	25x48x2
16	54210-95201-01J	BRACKET, lower mounting	1	
17	54165-95200	MOUNTING, lower thrust	1	

FIG.33

E - 12

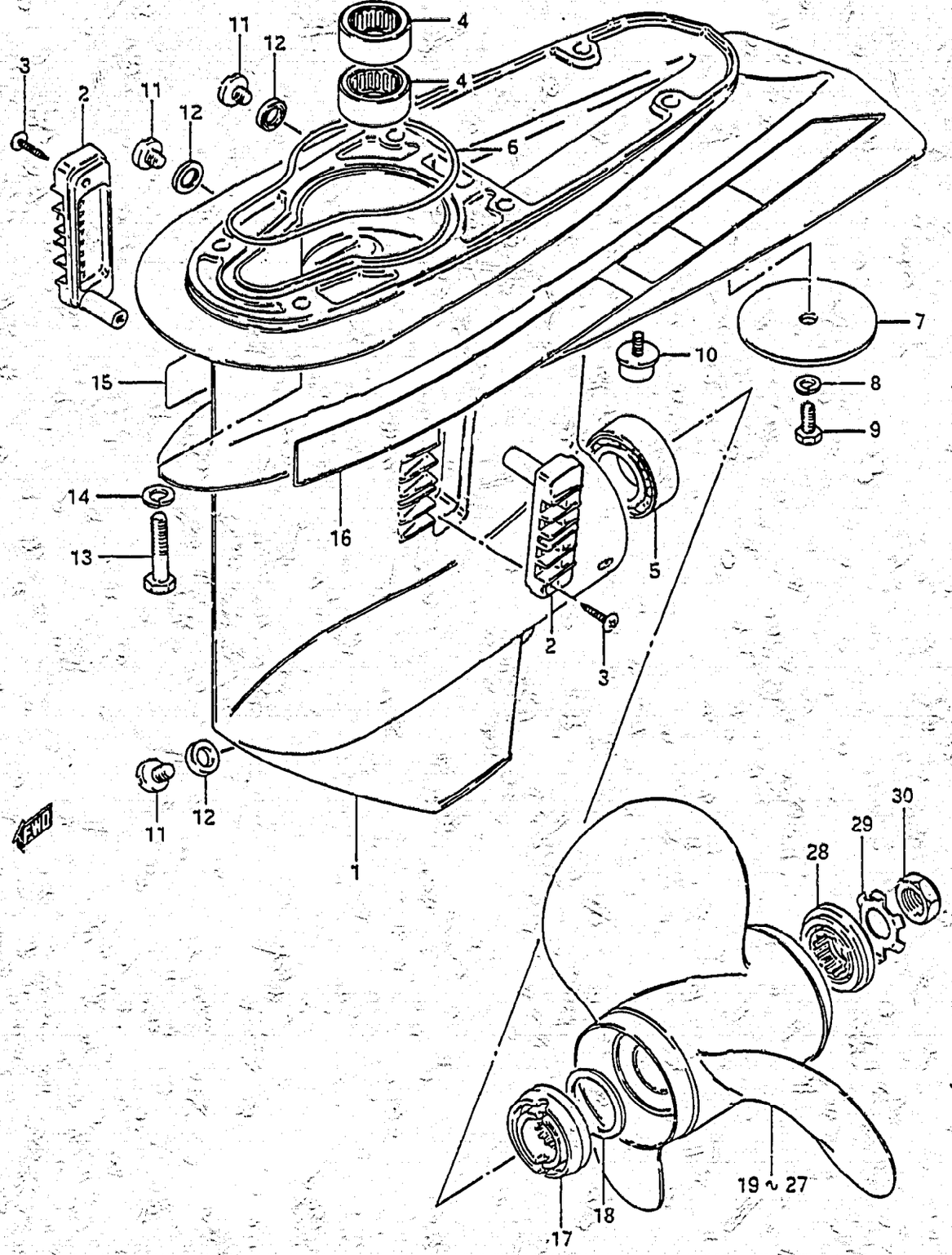

FIG.33 GEAR CASE (model G)

Ref. No.	Part No.	Description	Q'ty 50	Q'ty 65	Remarks
1-1	55100-95817-01J	CASE SET, gear	1	1	~5001-001460 ~6501-002027
1-2	55100-95830-01J	CASE SET, gear	1	1	
2	17631-95201-01J	•FILTER, water	2	2	
3	03142-04209	•SCREW	2	2	
4-1	09263-26005	•BEARING, pinion	2	2	
4-2	09263-26008	•BEARING, pinion	1	1	
5	09265-30004	•BEARING, propeller shaft	1	1	
6	55122-95201	SEAL, gear case	1	1	
7	55125-95202-01J	TRIM TAB	1	1	
8	09162-08003	LOCK WASHER	1	1	
9	09100-08090	BOLT, trim tab (8x16)	1	1	
10	55321-93141	ZINC, protection	1	1	
11-1	09248-10003	PLUG, drain	3	3	
11-2	09248-10004	PLUG, drain	3	3	from 09248-10003
12	09168-10004	GASKET, drain plug	3	3	to 09168-10022
13	09100-08101	BOLT (8x40)	6	6	
14	09162-08003	LOCK WASHER	6	6	
15	55141-95200	EMBLEM, gear case RH	1	1	
16	55151-95200	EMBLEM, gear case LH	1	1	
17	57632-95304	STOPPER, propeller bushing	1	1	
18	09160-32006	WASHER (32.6x45x1)	AR(0~1)		
19	58100-95210-01T	PROPELLER (3x292x254)	1	-	S1000 (3x11 1/2 x 10)
20	58100-95220-01T	PROPELLER (3x292x280)	1	-	S1100 (3x11 1/2 x 11)
21	58100-95390-01T	PROPELLER (3x295x305)	1	1	S1200 (3x11 5/8 x 12)
22	58100-95340-01T	PROPELLER (3x292x330)	1	1	S1300 (3x11 1/2 x 13)
23	58100-94310-01T	PROPELLER (3x292x330) to 5800-94311-01T	1	1	S1301 (3x11 1/2 x 13) DIECASTING
24	58100-95350-01T	PROPELLER (3x289x356) DT50 (M,W)	1	1	S1400 (3x11 3/8 x 14) to 58100-95351-01T
25	58100-95360-01T	PROPELLER (3x286x381) DT65 → STD	1	1	S1500 (3x11 1/4 x 15)
26	58100-95370-01T	PROPELLER (3x283x405) DT50	1	1	S1600 (3x11 1/8 x 16)
27	58100-95380-01T	PROPELLER (3x280x432)	1	1	S1700 (3x11x17)

FIG.34 (E-14) : model J/VZ

DT50, DT65

FIG.33

E - 13

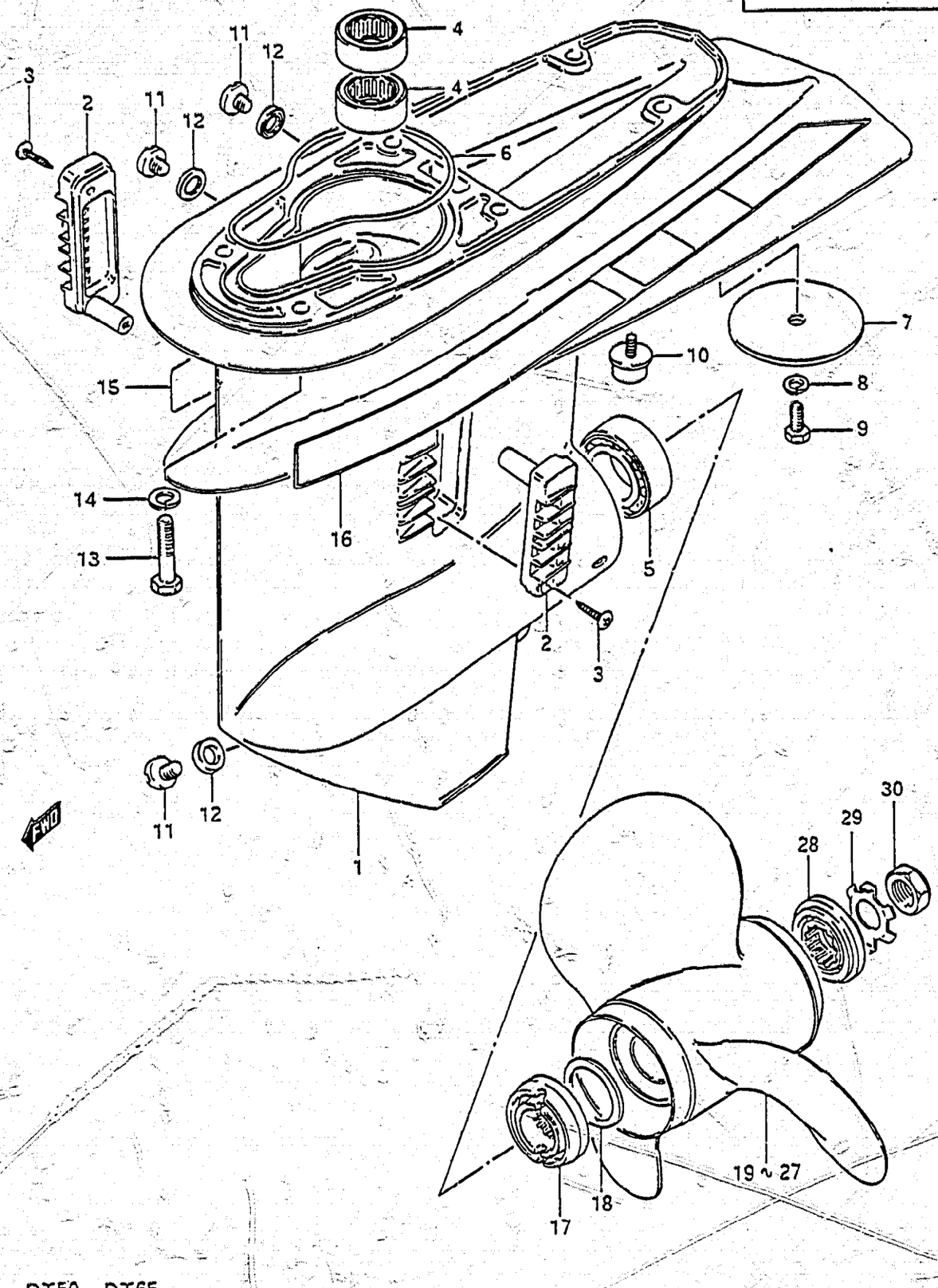

FIG.33 GEAR CASE (model G)

Ref. No.	Part No.	Description	Q'ty 50	Q'ty 65	Remarks
28-1	57633-95302	SPACER, propeller nut	1	1	to 57633-95303
28-2	57633-95303	SPACER, propeller nut	1	1	
29	57635-95300	WASHER	1	1	
30	09159-18004	NUT, propeller	1	1	

FIG.34 (E-14) : model J/VZ

FIG.34

E - 14

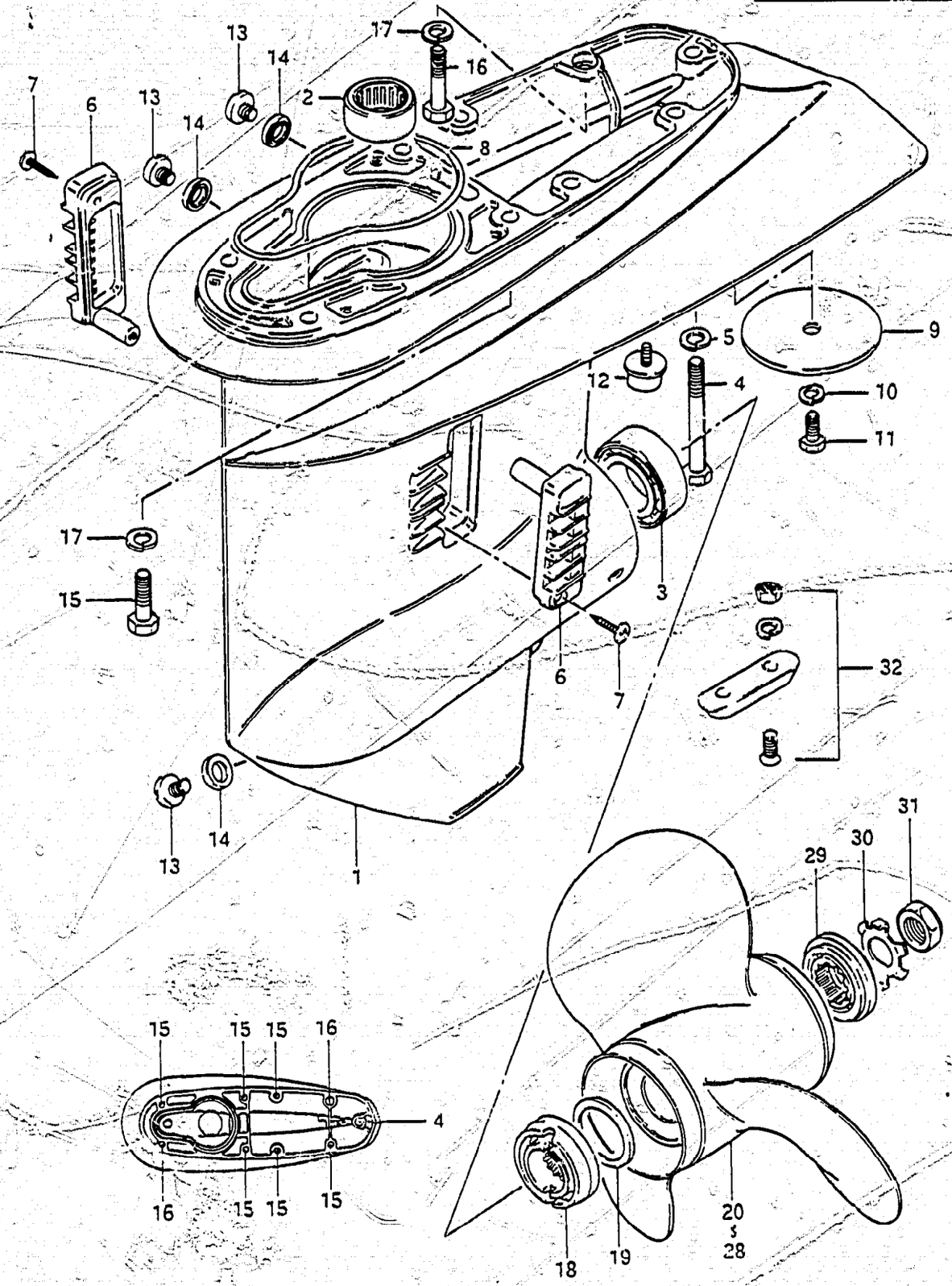

FIG.34 GEAR CASE (model J/VZ)

Ref. No.	Part No.	Description	Q'ty 50	Q'ty 65	Remarks
1	55100-95300-01J	CASE SET, gear	1	1	
2	09263-26008	•BEARING, pinion	1	1	
3	09265-30004	•BEARING, propeller shaft	1	1	
4	09100-10159	BOLT, gear case	1	1	
5	09162-10002	LOCK WASHER	1	1	
6	17631-95201-01J	FILTER, water	2	2	
7	03142-04209	SCREW	2	2	
8	55122-95201	SEAL, gear case	1	1	
9	55125-95202-01J	TRIM TAB	1	1	
10	09162-08003	LOCK WASHER	1	1	
11	09100-08090	BOLT, trim tab (8x16)	1	1	
12	55321-93141	ZINC, protection	1	1	
13	09248-10004	PLUG, drain	3	3	
14	09168-10022	GASKET, drain plug	3	3	
15	09100-08160	BOLT	6	6	
16	09100-08178	BOLT	2	2	
17	09162-08003	LOCK WASHER	8	8	
18	57632-95304	STOPPER, propeller bushing	1	1	
19	09160-32006	WASHER (32.6x45x1)	AR(0~1)		
20	58100-95210-01T	PROPELLER (3x292x254)	1	1	S1000 (3x11 1/2 x 10)
21	58100-95220-01T	PROPELLER (3x292x280)	1	1	S1100 (3x11 1/2 x 11)
22	58100-95391-01T	PROPELLER (3x295x305)	1	1	S1200 (3x11 5/8 x 12)
23	58100-95340-01T	PROPELLER (3x292x330)	1	1	S1300 (3x11 1/2 x 13)
24	58100-94311-01T	PROPELLER (3x292x330)	1	1	S1301 (3x11 1/2 x 13) DIECASTING
25	58100-95351-01T	PROPELLER (3x289x356) DT50 (M,W) → STD	1	1	S1400 (3x11 3/8 x 14)
26	58100-95361-01T	PROPELLER (3x286x381) DT65 → STD	1	1	S1500 (3x11 1/4 x 15)
27	58100-95371-01T	PROPELLER (3x283x405) DT50 → STD	1	1	S1600 (3x11 1/8 x 16)
28	58100-95380-01T	PROPELLER (3x280x432)	1	1	S1700 (3x11x17)
29	57633-94300	SPACER, propeller nut	1	1	
30	57635-95300	WASHER	1	1	
31	09159-18004	NUT, propeller	1	1	
32	55300-95500	ZINC, protection	1	1	OPT

FIG.33 (E-12,13) : model G

DT50, DT65

FIG.35

F - 2

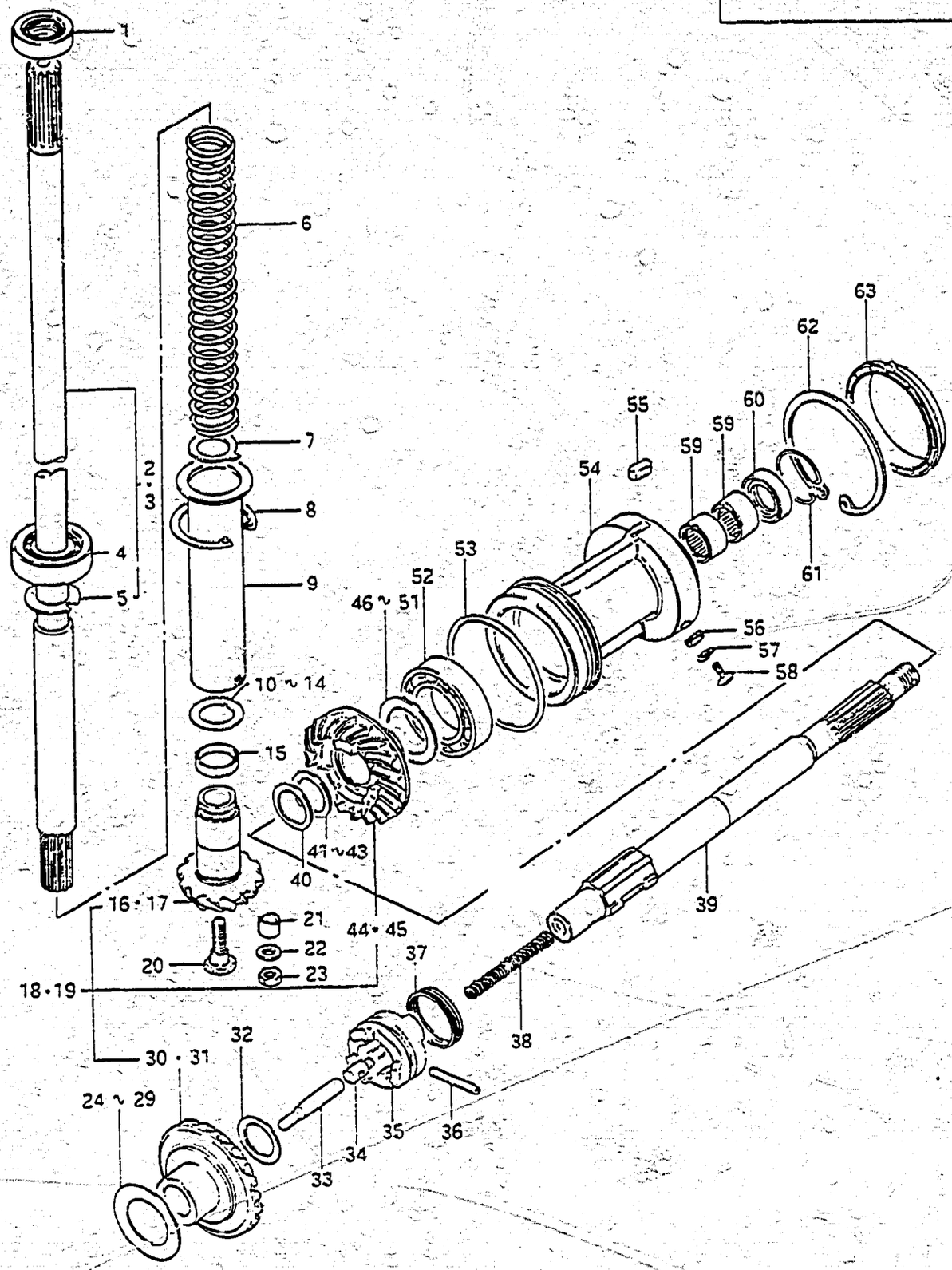

DT50, DT65

FIG.35 TRANSMISSION (model G)

Ref. No.	Part No.	Description	Q'ty 50	Q'ty 65	Remarks
1	09289-17005	OIL SEAL, driveshaft	1	1	
2-1	57100-95820	SHAFT SET, drive (L type)	1	1	~5001-001460 ~6501-002027
2-2	57100-95850	SHAFT SET, drive (L type)	1	1	
3-1	57100-95830	SHAFT SET, drive (S type)	1	1	
3-2	57100-95860	SHAFT SET, drive (S type)	1	1	
4	09265-17001	•BEARING, driveshaft	1	1	
5	09156-17004	•THRUST WASHER	1	1	
6	09440-26002	SPRING, driveshaft preload	1	1	
7	09167-20017	LOCK WASHER, driveshaft	1	1	
8	08331-21479	CIRCLIP	1	1	
9	57133-95200	COLLAR, preload spring	1	1	
10	09181-17001	SHIM (T:4.4)	AR(0~1)		
11	09181-17002	SHIM (T:4.5)	AR(0~1)		
12	09181-17003	SHIM (T:4.6)	AR(0~1)		
13	09181-17004	SHIM (T:4.7)	AR(0~1)		
14	09181-17005	SHIM (T:4.8)	AR(0~1)		
15	09180-22019	SPACER, pinion bearing	1	1	
16	57310-95204	PINION (NT:11)	1	-	to 57300-95820
17	57310-95302	PINION (NT:12)	(1)	1	(DT50G E9,G E13 DT50MG E1,MG E3, MG E9,MG E13,MG E28) to 57300-95830
18-1	57300-95820	PINION/GEAR SET	1	--	
18-2	57300-95821	PINION/GEAR SET	1	--	from 57300-95820
18-3	57300-95840	PINION/GEAR SET	1	-	
18-4	57300-95841	PINION/GEAR SET	1	-	from 57300-95840 to 57300-95860
19-1	57300-95830	PINION/GEAR SET	(1)	1	
19-2	57300-95831	PINION/GEAR SET	(1)	1	from 57300-95830
19-3	57300-95850	PINION/GEAR SET	(1)	1	
19-4	57300-95851	PINION/GEAR SET	(1)	1	from 57300-95850 to 57300-95870
20	09111-08030	BOLT	1	1	
21	09180-12087	SPACER (12x16.5x6.5)	1	1	
22	08211-10162	WASHER	1	1	5001-001461~
23	09140-10022	NUT	1	1	6501-002028~

FIG.36 (F-5,6) : model J/VZ

DT50, DT65

FIG.35

F - 3

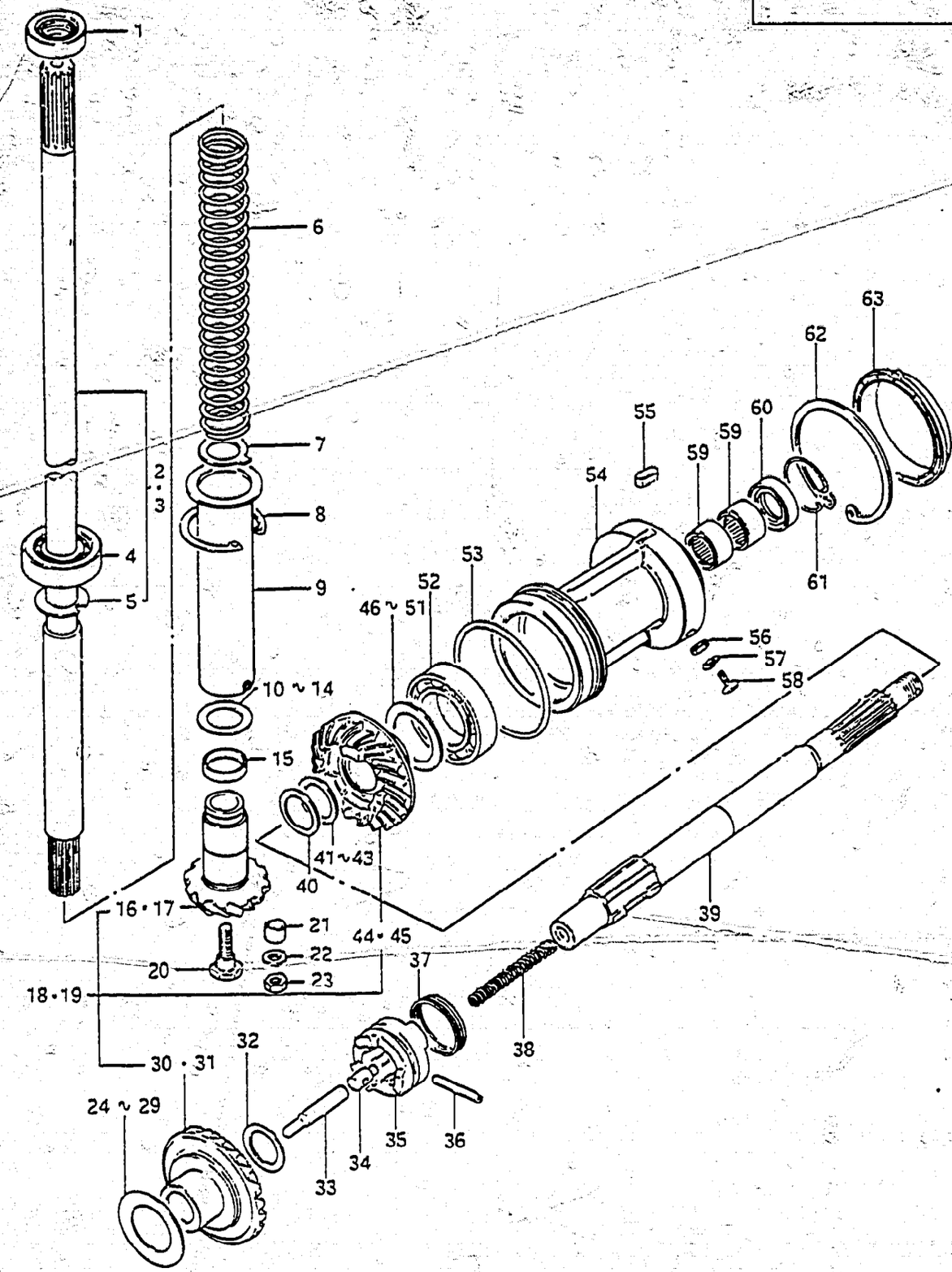

FIG.35 TRANSMISSION (model G)

Ref. No.	Part No.	Description	Q'ty 50	Q'ty 65	Remarks
24	08221-30455	SHIM (T:0.5)	AR(0~1)		
25	09181-30007	SHIM (T:0.6)	AR(0~1)		
26	09181-30008	SHIM (T:0.7)	AR(0~1)		
27	09181-30009	SHIM (T:0.8)	AR(0~1)		
28	09181-30010	SHIM (T:0.9)	AR(0~1)		
29	08211-30451	SHIM (T:1)	AR(0~1)		
30	57510-95201	GEAR, forward (NT:24)	1	-	to 57300-95820
31	57510-95301	GEAR, forward (NT:23)	(1)	1	to 57300-95830
32	08211-20283	THRUST WASHER (T:2)	1	1	
33	57631-95200	ROD, push	1	1	
34	09209-08016	PIN, push	1	1	
35-1	57621-95203	SHIFTER, clutch dog	1	1	
35-2	57621-95204	SHIFTER, clutch dog	1	1	from 57621-95203
36	09202-05017	PIN	1	1	
37	09440-41002	SPRING, dog	1	1	
38	09440-07018	SPRING, return	1	1	
39	57610-95203	SHAFT, propeller	1	1	
40	09181-22003	SHIM (T:0.5)	AR(0~1)		
41	09160-22016	THRUST WASHER (T:1.5)	AR(0~1)		
42	09160-22024	THRUST WASHER (T:1.75)	AR(0~1)		
43	09160-22025	THRUST WASHER (T:2)	AR(0~1)		
44	57521-95201	GEAR, reverse (NT:24)	1	-	to 57300-95820
45	57521-95301	GEAR, reverse (NT:23)	(1)	1	(DT50G E9,G E13 DT50MG E1,MG E3, MG E9,MG E13,MG E28) to 57300-95830
46	09181-35003	SHIM (T:0.5)	AR(0~1)		
47	09181-35004	SHIM (T:1.2)	AR(0~1)		
48	09181-35005	SHIM (T:1.3)	AR(0~1)		
49	09181-35006	SHIM (T:1.4)	AR(0~1)		
50	09181-35007	SHIM (T:1.5)	AR(0~1)		
51	09181-35008	SHIM (T:1.6)	AR(0~1)		
52	08113-60070	BEARING, reverse gear	1	1	
53	09280-71001	O RING	1	1	

FIG.36 (F-5,6) : model J/VZ

DT50, DT65

FIG. 35

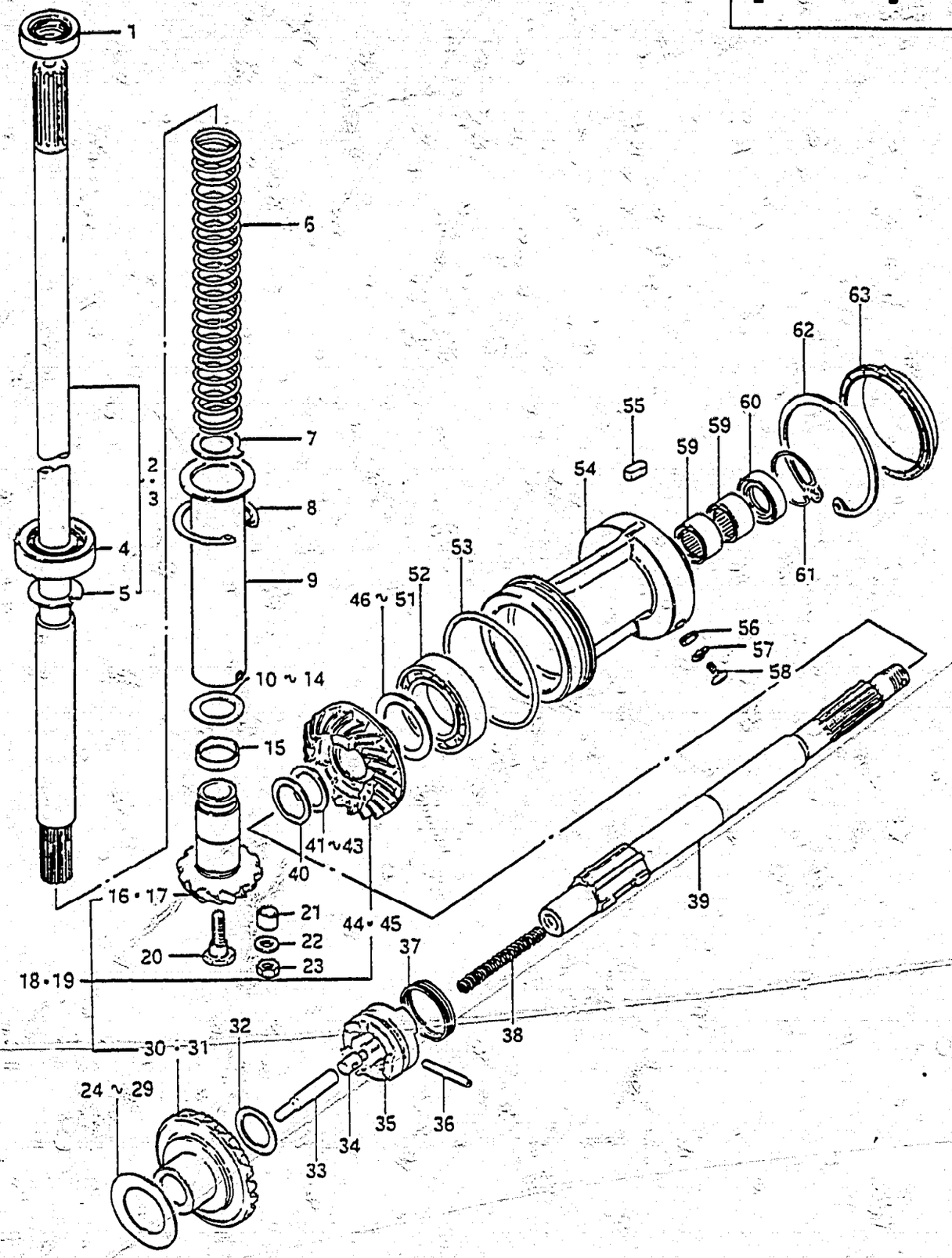

DT50, DT65

FIG. 35 TRANSMISSION (model G)

Ref. No.	Part No.	Description	Q'ty 50	Q'ty 65	Remarks
54	56121-95204	HOUSING, propeller shaft	1	1	
55	09421-05005	KEY, propeller shaft housing	1	1	
56	09140-06004	NUT	2	2	
57	09162-06001	LOCK WASHER	2	2	
58	09127-06005	SCREW	2	2	
59	09263-22020	BEARING, propeller shaft	2	2	
60	09289-22006	OIL SEAL, propeller shaft	1	1	22x35x10.7
61	09387-37001	RING, propeller shaft oil seal	1	1	
62	09381-82001	RING, propeller shaft housing	1	1	
63	58161-95301	SEAL RING, propeller	1	1	

FIG. 36 (F-5,6) : model J/VZ

FIG.36

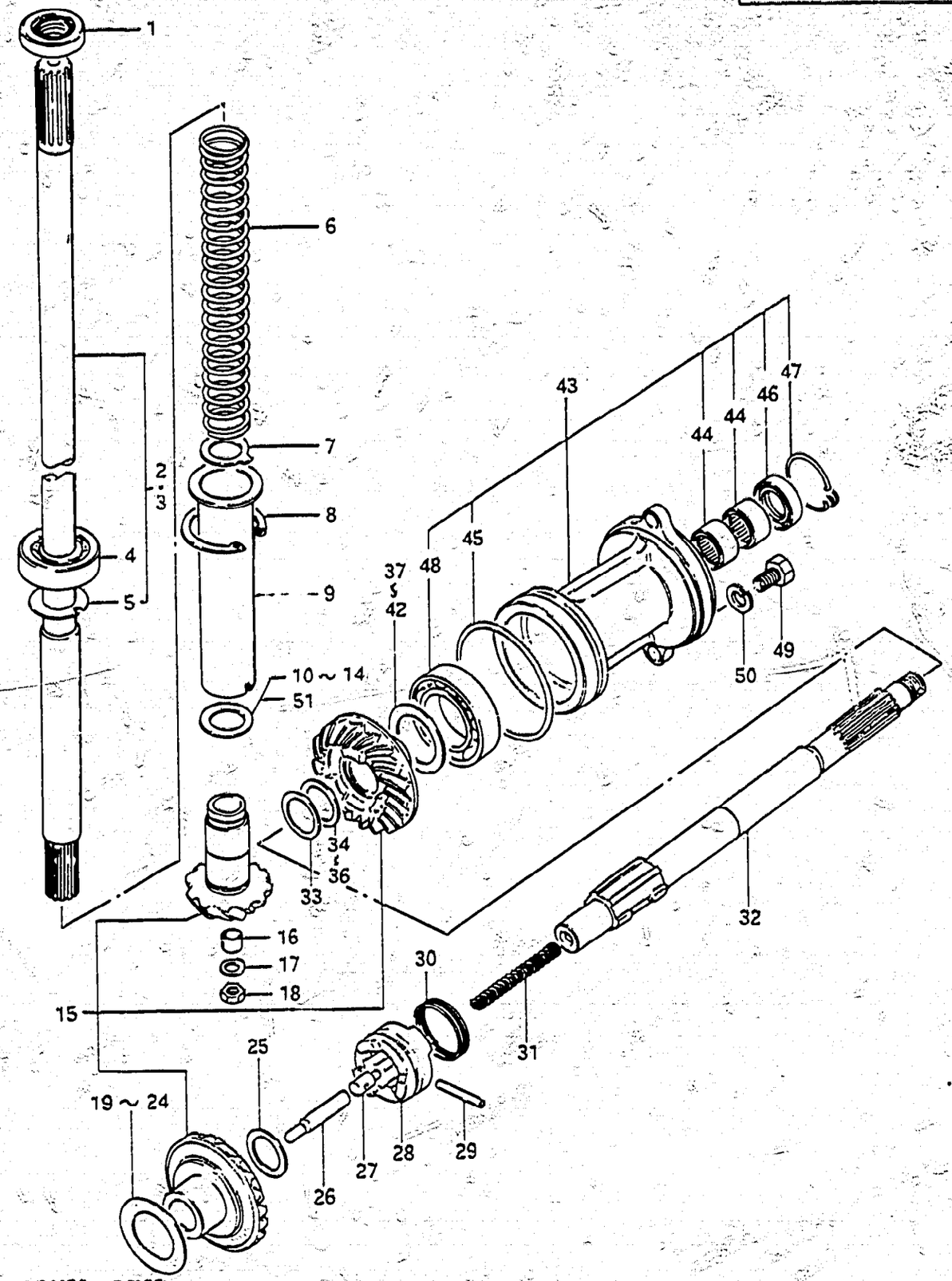

DT50, DT65

50

FIG.36 TRANSMISSION (model J/VZ)

Ref. No.	Part No.	Description	Q'ty 50	Q'ty 65	Remarks
1	09289-17005	OIL SEAL, driveshaft	1	1	
2	57100-95850	SHAFT SET, drive (L type)	1	1	
3	57100-95860	SHAFT SET, drive (S type)	1	1	
4	09265-17001	•BEARING, driveshaft	1	1	
5	09166-17004	•THRUST WASHER	1	1	
6	09440-26002	SPRING, driveshaft preload	1	1	
7	09167-20017	LOCK WASHER, driveshaft	1	1	
8	08331-21479	CIRCLIP	1	1	
9	57133-95200	COLLAR, preload spring	1	1	
10	09181-17001	SHIM (T:4.4)	AR(0~1)		
11	09181-17002	SHIM (T:4.5)	AR(1)		
12	09181-17003	SHIM (T:4.6)	AR(0~1)		
13	09181-17004	SHIM (T:4.7)	AR(0~1)		
14	09181-17005	SHIM (T:4.8)	AR(0~1)		
15-1	57300-95860	PINION/GEAR SET	1	-	
15-2	57300-95870	PINION/GEAR SET	1	1	DT50(M,W)J/VZ, DT65J/VZ
16	09180-12087	SPACER (12x16.5x6.5)	1	1	
17	08211-10162	WASHER	1	1	
18	09140-10022	NUT	1	1	
19	08221-30455	SHIM (T:0.5)	AR(0~1)		
20	09181-30007	SHIM (T:0.6)	AR(0~1)		
21	09181-30008	SHIM (T:0.7)	AR(0~1)		
22	09181-30009	SHIM (T:0.8)	AR(0~1)		
23	09181-30010	SHIM (T:0.9)	AR(0~1)		
24	08211-30451	SHIM (T:1)	AR(0~1)		
25	08211-20283	THRUST WASHER (T:2)	1	1	

FIG.35 (F-2,3,4) : model G

DT50, DT65

FIG.36

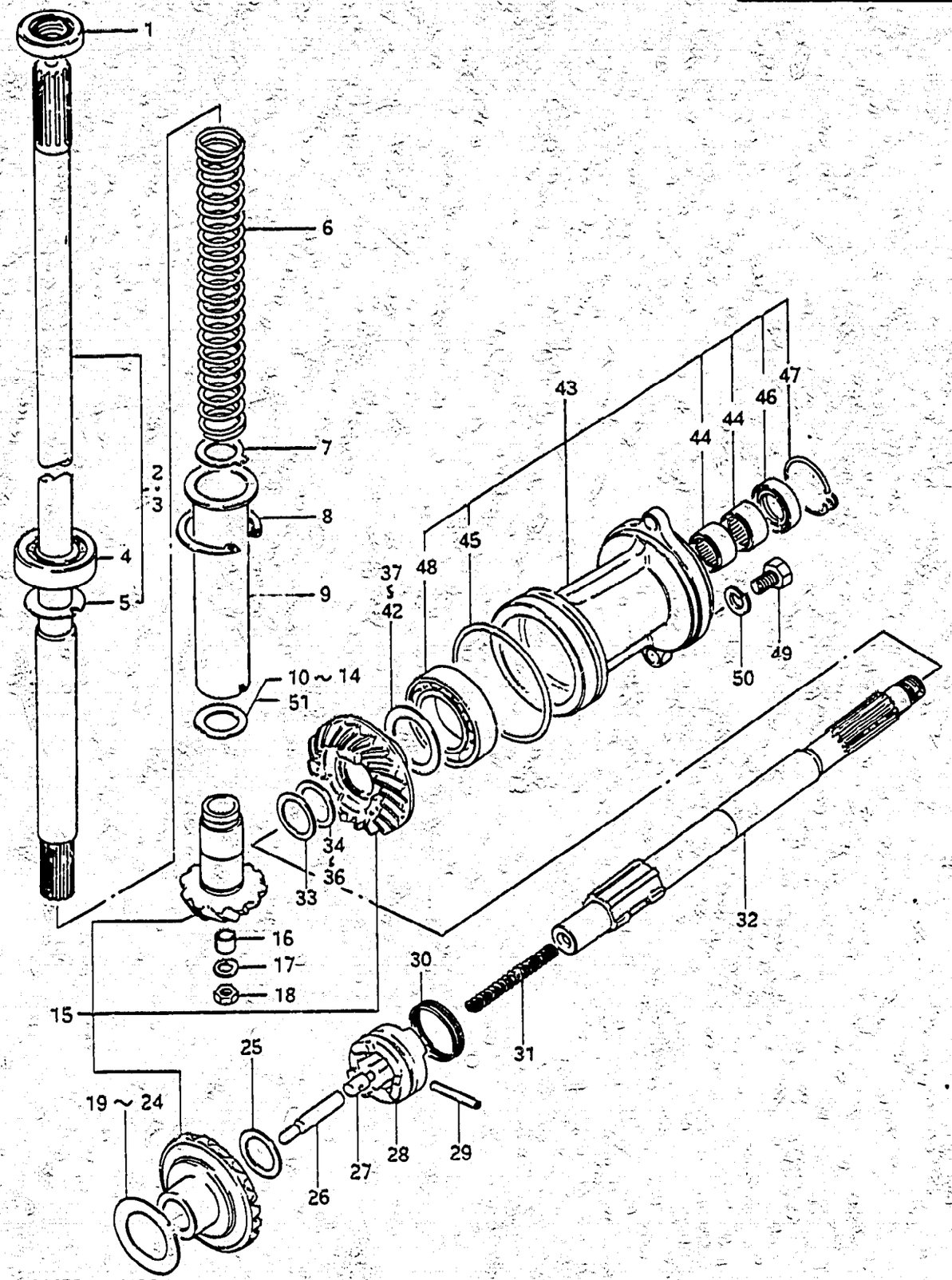

DT50, DT65

FIG.36 TRANSMISSION (model J/VZ)

Ref. No.	Part No.	Description	Q'ty 50	Q'ty 65	Remarks
26	57631-95200	ROD, push	1	1	
27	09209-08016	PIN, push	1	1	
28	57621-95204	SHIFTER, clutch dog	1	1	
29	09202-05017	PIN	1	1	
30	09440-41002	SPRING, dog	1	1	
31	09440-07018	SPRING, return	1	1	
32	57610-95203	SHAFT, propeller	1	1	
33	09181-22003	SHIM (T:0.5)	AR(0~1)		
34	09160-22016	THRUST WASHER (T:1.5)	AR(0~1)		
35	09160-22024	THRUST WASHER (T:1.75)	AR(0~1)		
36	09160-22025	THRUST WASHER (T:2)	AR(0~1)		
37	09181-35003	SHIM (T:0.5)	AR(0~1)		
38	09181-35004	SHIM (T:1.2)	AR(0~1)		
39	09181-35005	SHIM (T:1.3)	AR(0~1)		
40	09181-35006	SHIM (T:1.4)	AR(0~1)		
41	09181-35007	SHIM (T:1.5)	AR(0~1)		
42	09181-35008	SHIM (T:1.6)	AR(0~1)		
43	56120-95300-01J	HOUSING, propeller shaft	1	1	
44	09263-22020	•BEARING, propeller shaft	2	2	
45	09280-71001	•O RING	1	1	
46	09289-22006	•OIL SEAL, propeller shaft	1	1	22x35x10.7
47	09387-37001	•RING, propeller shaft oil seal	1	1	
48	08113-60070	•BEARING, reverse gear	1	1	
49	09100-08112	BOLT, propeller shaft housing	2	2	
50	09162-08003	LOCK WASHER	2	2	
51-1	09181-17006	SHIM, pinion	1	1	
51-2	09181-17007	SHIM, pinion	1	1	

FIG.35 (F-2,3,4) : model G

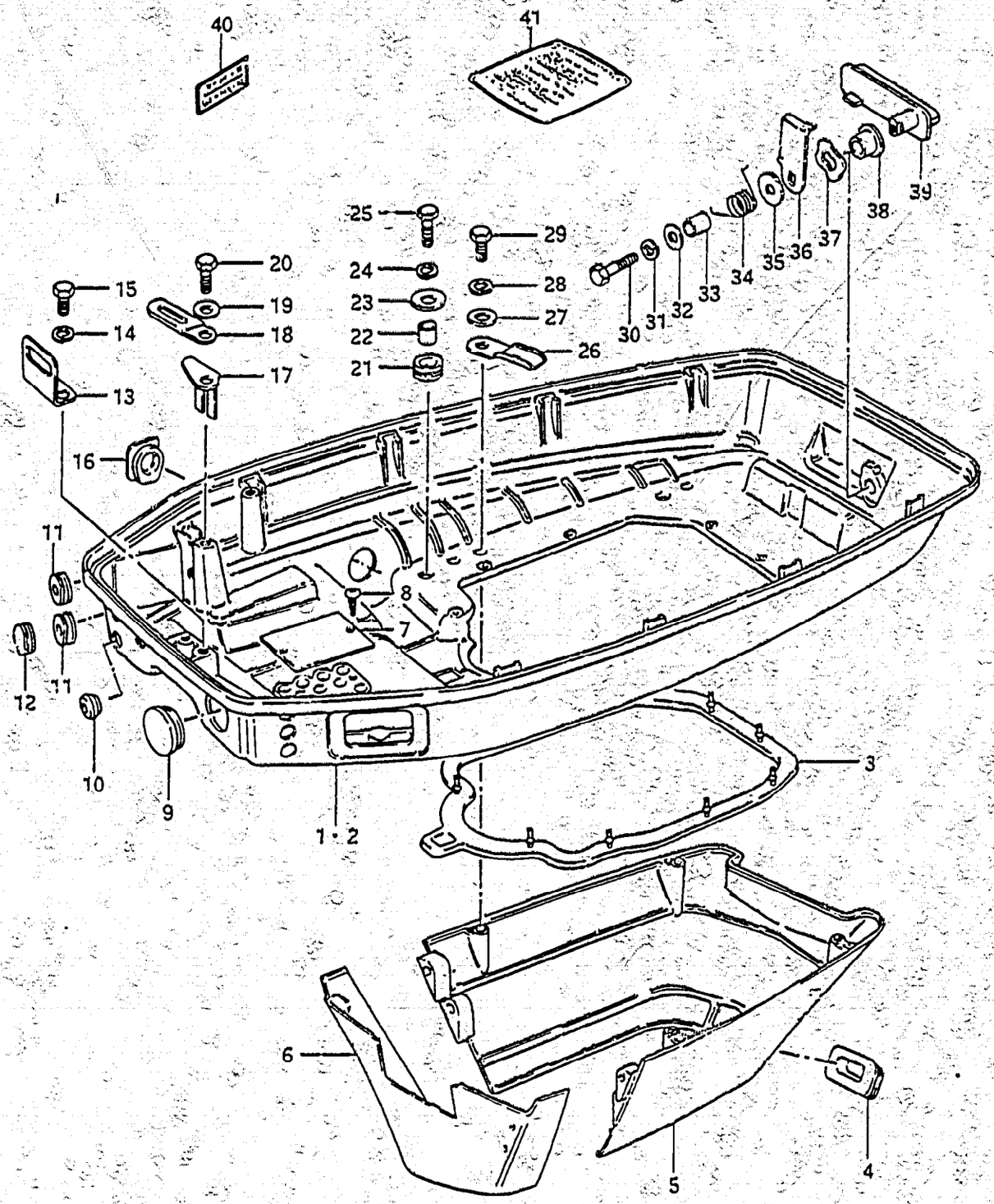

FIG. 37 LOWER COVER (model G)

Ref. No.	Part No.	Description	Q'ty 50/65	Remarks
1	61111-95204-01J	COVER, lower	1	
2	61111-95214-01J	COVER, lower	1	DT50MG(E1,E3,E9, E13,E28)
3	61113-95202	SEAL, lower cover	1	
4	61142-95200	GROMMET	1	
5	61141-95202-01J	COVER, lower rear	1	
6	61131-95201-01J	COVER, lower front	1	
7	61117-95200	COVER, air intake	1	OPT
8	09125-05023	SCREW	2	OPT
9	09250-30003	CAP, starter hole	1	
10	63725-95200	GROMMET, choke cable	1	
11	67331-95201	GROMMET, control cable	2	
12	67332-95200	CAP, remote control cable	1	DT50MG(E1,E3,E9, E13,E28)
13	61116-95201	PLATE, lower cover	1	
14	09162-06001	LOCK WASHER	2	
15	09100-06058	BOLT (6x15)	2	
16	61124-95200	GROMMET	1	
17	67273-95201	HOLDER, control cable	1	
18	09404-06401	CLAMP, fuel hose (L:50)	1	
19	09162-06001	LOCK WASHER	1	
20	09100-06058	BOLT (6x15)	1	
21	09320-10011	CUSHION, lower cover	4	
22	09180-06006	SPACER (6.8x10x11.5)	4	
23	09160-06047	WASHER (6.5x22x2)	4	
24	09162-06001	LOCK WASHER	4	
25	09100-06047	BOLT (6x25)	4	
26	09403-07309	CLAMP, fuel hose	1	from 09403-07301
27	09160-06015	WASHER (6.5x13x1)	8	
28	09162-06001	LOCK WASHER	8	
29	09100-06020	BOLT (6x20)	8	

FIG. 38 (F-9,10) : model J/VZ

FIG.37

F - 8

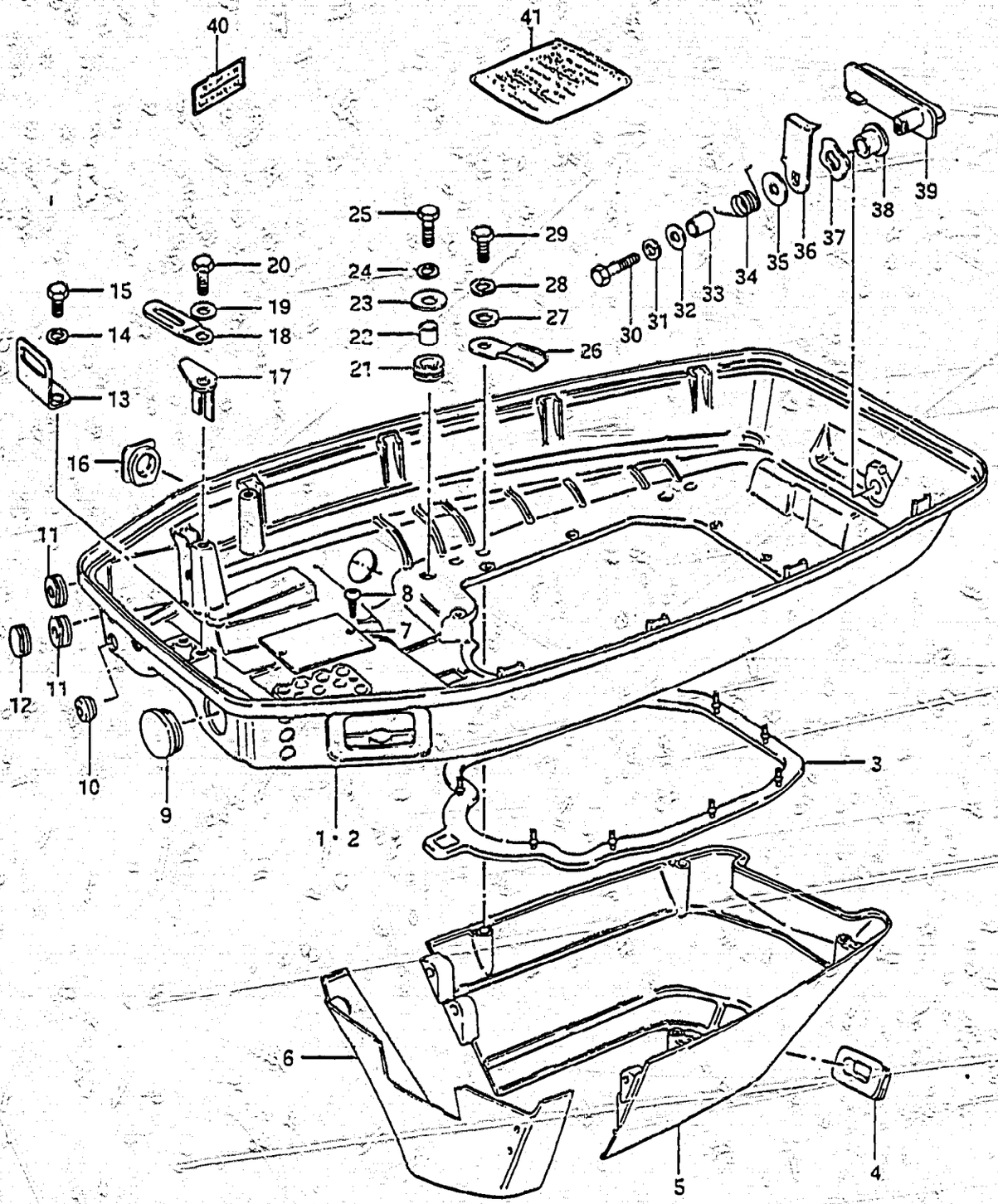

53

FIG.37 LOWER COVER (model G)

Ref. No.	Part No.	Description	Q'ty 50/65	Remarks
30	09100-06089	BOLT (6x25)	1	
31	09162-06001	LOCK WASHER	1	
32	09160-06015	WASHER (6.5x13x1)	1	
33	09180-06089	SPACER (6.1x9x9)	1	
34	09448-12006	SPRING, hook lever	1	
35	09160-06046	WASHER (6.5x20x1.5)	1	
36	61631-95500	HOOK, lower cover	1	
37	09164-13005	WAVE WASHER	1	
38	09306-13002	BUSHING, hook lever	1	
39	61633-95201-01J	LEVER, hook	1	
40	21131-96001	MARK, clutch shifting to 21131-96002	1	DT50MG(E1,E3,E9, E13,E28)
41	61511-95220	MARK, start indicate	1	

FIG.38 (F-9,10) : model J/VZ

FIG.38

F - 9

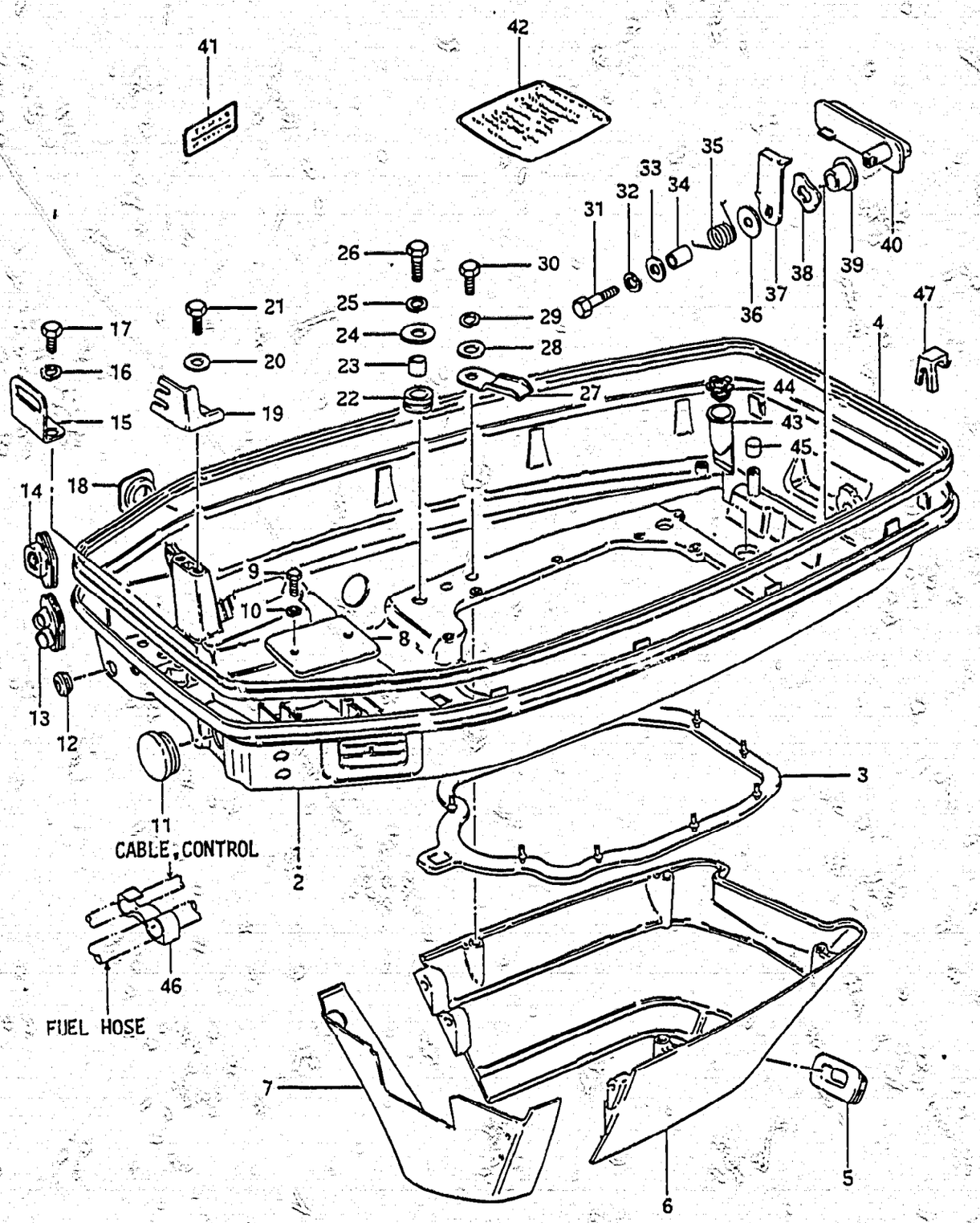

FIG.38 LOWER COVER (model J/VZ)

Ref. No.	Part No.	Description	Q'ty 50/65	Remarks
1-1	61111-95221-01J	COVER, lower	1	
1-2	61110-95222-01J	COVER, lower	1	
2-1	61111-95231-01J	COVER, lower	1	DT50MJ(E3,E9,E13,E28)
2-2	61110-95232-01J	COVER, lower	1	DT50MVZ(E1,E7,E13, E28,E40)
3	61113-95202	SEAL, lower cover lower	1	
4	61112-95206	SEAL, lower cover upper	1	
5	61142-95200	GROMMET	1	
6	61141-95202-01J	COVER, lower rear	1	
7	61131-95201-01J	COVER, lower front	1	
8	61117-95501	COVER, air intake	1	
9	02152-06128	SCREW	2	
10	08322-21068	WASHER	2	
11	09250-30003	CAP, starter hole	1	
12	63725-95200	GROMMET, choke cable	1	
13	67331-95210	GROMMET, control cable	1	
14	67331-95220	GROMMET, control cable	1	DT50MJ(E3,E9,E13,E28) DT50MVZ(E1,E7,E13, E28,E40)
15	61116-95201	PLATE, lower cover	1	
16	09162-06001	LOCK WASHER	2	
17	09100-06058	BOLT (6x15)	2	
18	61124-95200	GROMMET	1	
19	67271-95210	HOLDER, control cable	1	
20	09162-06001	LOCK WASHER	2	
21	09100-06058	BOLT (6x15)	2	
22	09320-10011	CUSHION, lower cover	4	
23	09180-06006	SPACER (6.8x10x11.5)	4	
24	09160-06047	WASHER (6.5x22x2)	4	
25	09162-06001	LOCK WASHER	4	
26-1	09100-06047	BOLT (6x25)	4	
26-2	09100-06089	BOLT (6x25)	4	

FIG.37 (F-7,8) : model G

DT50, DT65

FIG.38

F - 10

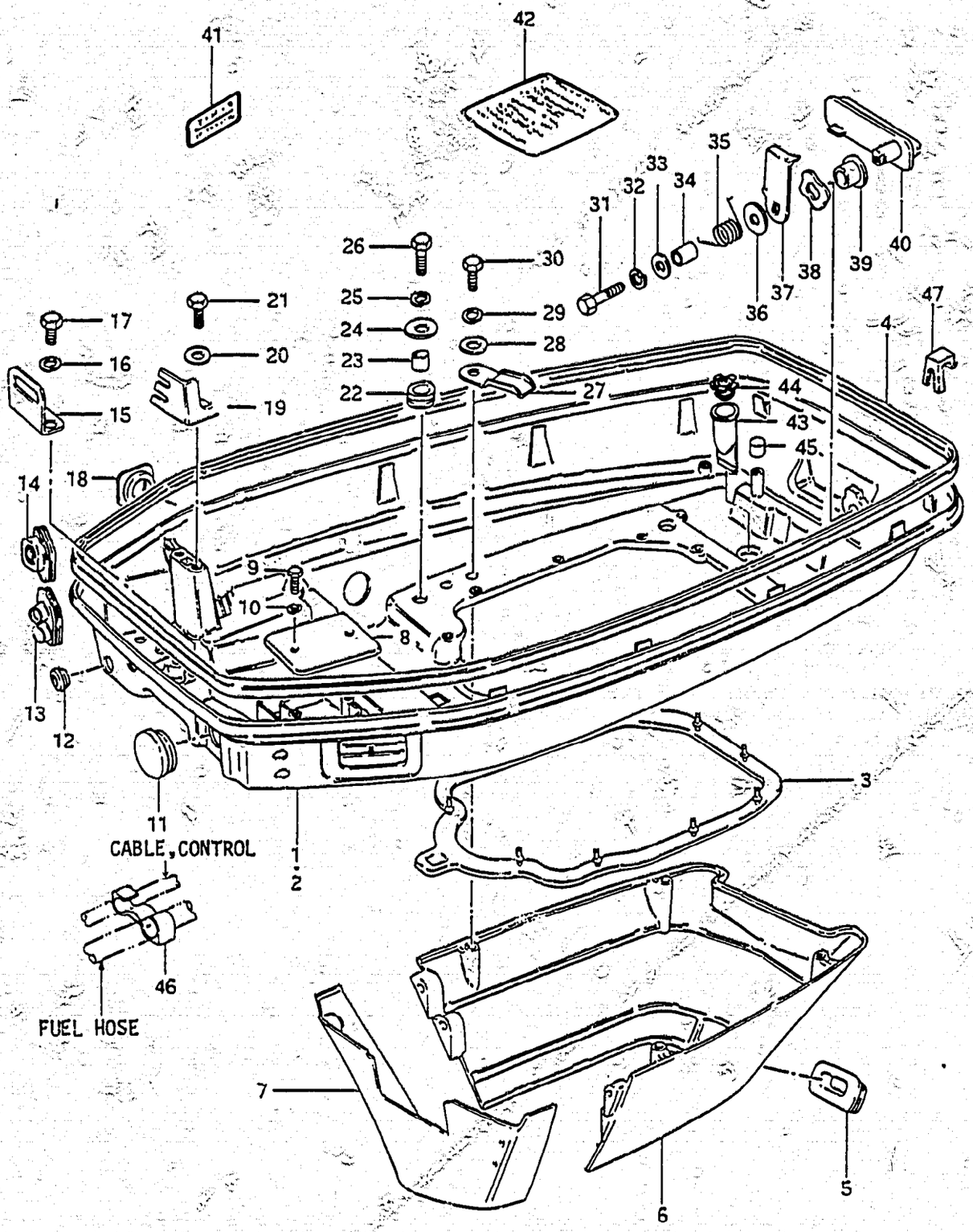

FIG.38 LOWER COVER (model J/VZ)

Ref. No.	Part No.	Description	Q'ty 50/65	Remarks
27	09403-07309	CLAMP, fuel hose	1	from 09403-07301
28	09160-06015	WASHER (6.5x13x1)	8	
29	09162-06001	LOCK WASHER	8	
30	09100-06020	BOLT (6x20)	8	
31	09100-06089	BOLT (6x25)	1	
32	09162-06001	LOCK WASHER	1	
33	09160-06015	WASHER (6.5x13x1)	1	
34	09180-06089	SPACER (6.1x9x9)	1	
35	09448-12006	SPRING, hook lever	1	
36	09160-06046	WASHER (6.5x20x1.5)	1	
37	61631-95500	HOOK, lower cover	1	
38	09164-13005	WAVE WASHER	1	
39	09306-13002	BUSHING, hook lever	1	
40	61633-95201-01J	LEVER, hook	1	
41	21131-96002	MARK, clutch shifting	1	DT50MJ(E3,E9,E13,E28)
42	61511-95220	MARK, start indicate	1	DT50MVZ(E1,E7,E13, E28,E40)
43	13873-20300	TUBE, drain	1	
44	13979-37400	RETAINER, drain tube	1	
45	09251-13001	CAP, lower cover	1	
46	09408-00029	CLIP, fuel hose	1	
47	36641-95500	STOPPER, relay harness	4	TVZ

FIG.37 (F-7,8) : model G

FIG.39

F - 11

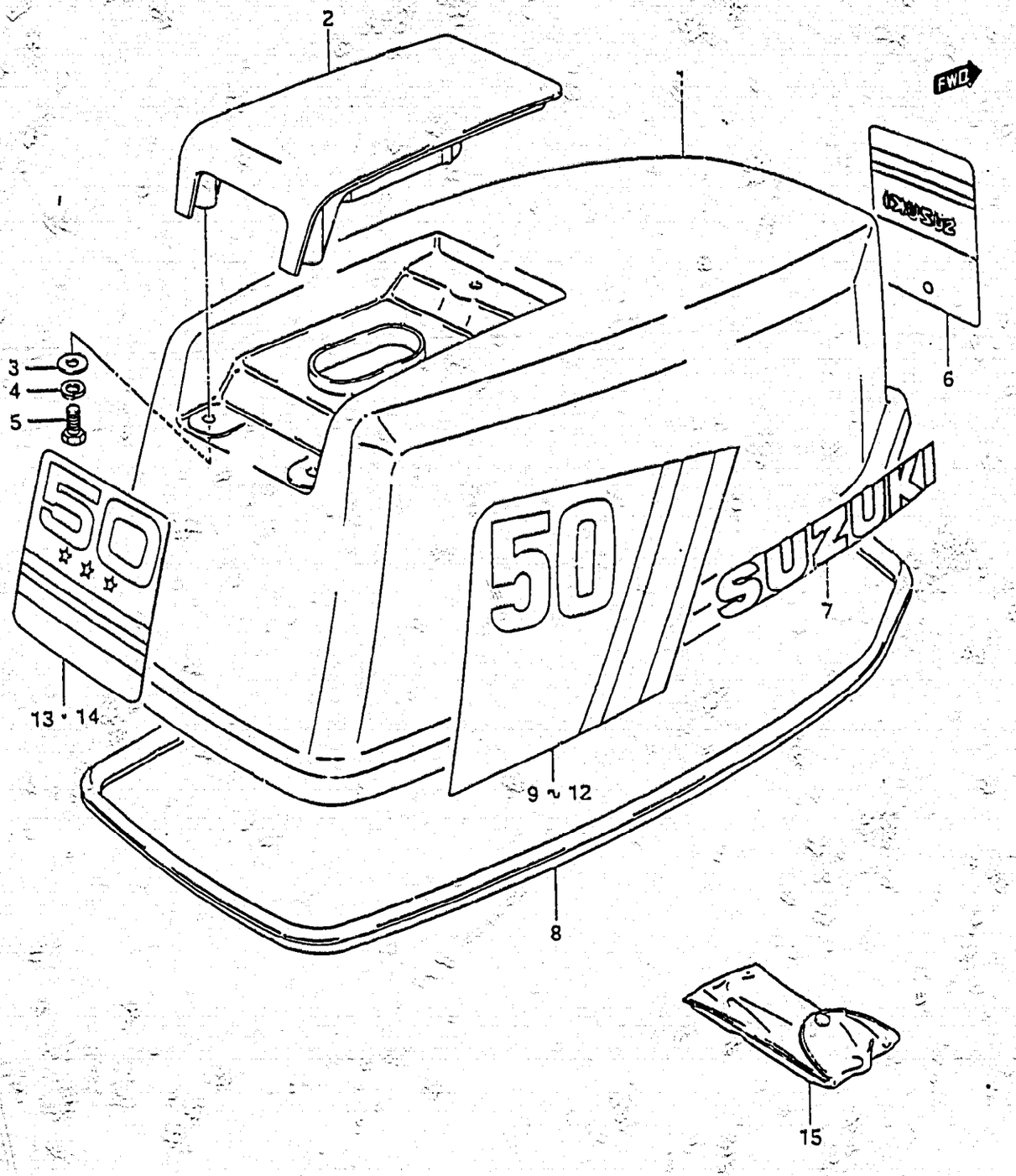

FIG.39 ENGINE COVER

Ref. No.	Part No.	Description	Q'ty 50	Q'ty 65	Remarks
1-1	61400-95850-01T	COVER SET, engine	1	1	model G to 61400-95851-01T
1-2	61400-95851-01T	COVER SET, engine	1	1	model J/VZ
2	61431-95201-01T	·HANDLE, tilt up	1	1	from 61431-95200-01T
3	09160-06036	·WASHER (6.5x18x1.5)	3	3	
4	09162-06001	·LOCK WASHER	3	3	
5	09100-06019	·BOLT (6x16)	3	3	
6	61421-95202	·EMBLEM, front	1	1	
7-1	61441-95200	·EMBLEM, side	2	2	model G,to 61441-94300
7-2	61441-94300	·EMBLEM, side	2	2	model J/VZ
8-1	61112-95205	RUBBER, engine cover	1	1	to 61112-95206
8-2	61112-95206	RUBBER, engine cover	1	1	
9	61443-95202	DECAL, RH "50"	1	-	
10	61453-95202	DECAL, LH "50"	1	-	
11	61443-95301	DECAL, RH "65"	-	1	
12	61453-95301	DECAL, LH "65"	-	1	
13	61435-95200	EMBLEM, rear "50"	1	-	
14	61435-95300	EMBLEM, rear "65"	-	1	
15-1	09800-00805	TOOL ASSY	1	1	to 09800-81800
15-2	09800-81800	TOOL ASSY	1	1	

FIG.40 (F-12) : DT50MG (E1, E9, E13)
DT50MJ (E3, E9, E13, E28)
DT50MVZ (E1, E7, E13, E28, E40)

FIG. 40

F - 12

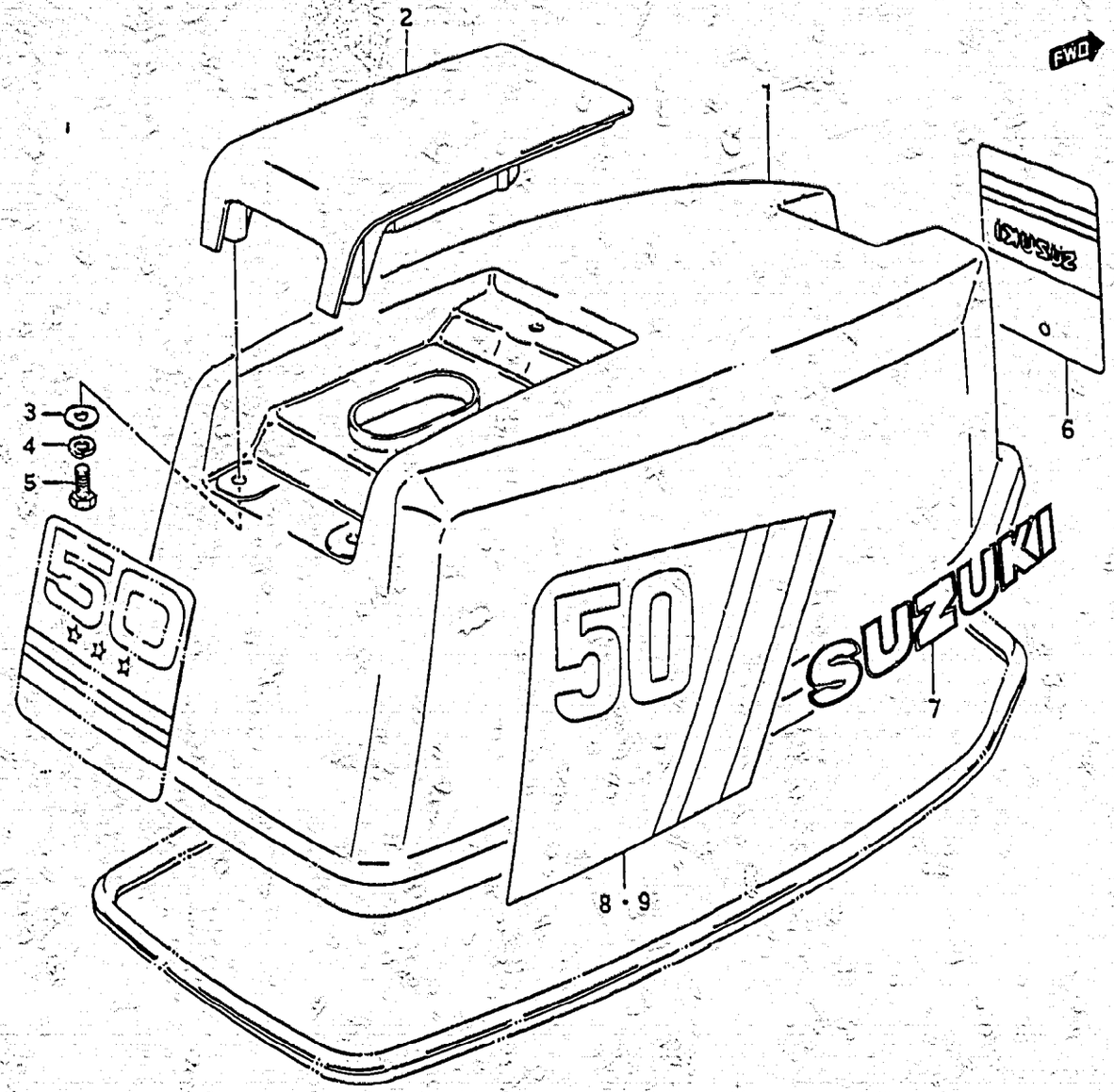

FIG. 40 ENGINE COVER (DT50M)

Ref. No.	Part No.	Description	Q'ty	Remarks
		(DT50MG (E1, E9, E13))		
		(DT50MJ (E3, E9, E13, E28))		
		(DT50MVZ (E1, E7, E13, E28, E40))		
1-1	61400-95870-01T	COVER SET, engine to 61400-95871-01T	1	model G
1-2	61400-95871-01T	COVER SET, engine	1	model J
1-3	61400-95872-01T	COVER SET, engine	1	model VZ
2	61431-95201-01T	·HANDLE, tilt up	1	
3	09160-06036	·WASHER (6.5x18x1.5)	3	
4	09162-06001	·LOCK WASHER	3	
5	09100-06019	·BOLT (6x16)	3	
6	61421-95202	·EMBLEM, front	1	
7-1	61441-95200	·EMBLEM, side to 61441-94300	2	model G
7-2	61441-94300	·EMBLEM, side	2	model J/VZ
8	61443-95220	DECAL, RH	1	
9	61453-95220	DECAL, LH	1	

FIG.39 (F-11) : DT50, DT65

DT50, DT65

FIG.41

F - 13

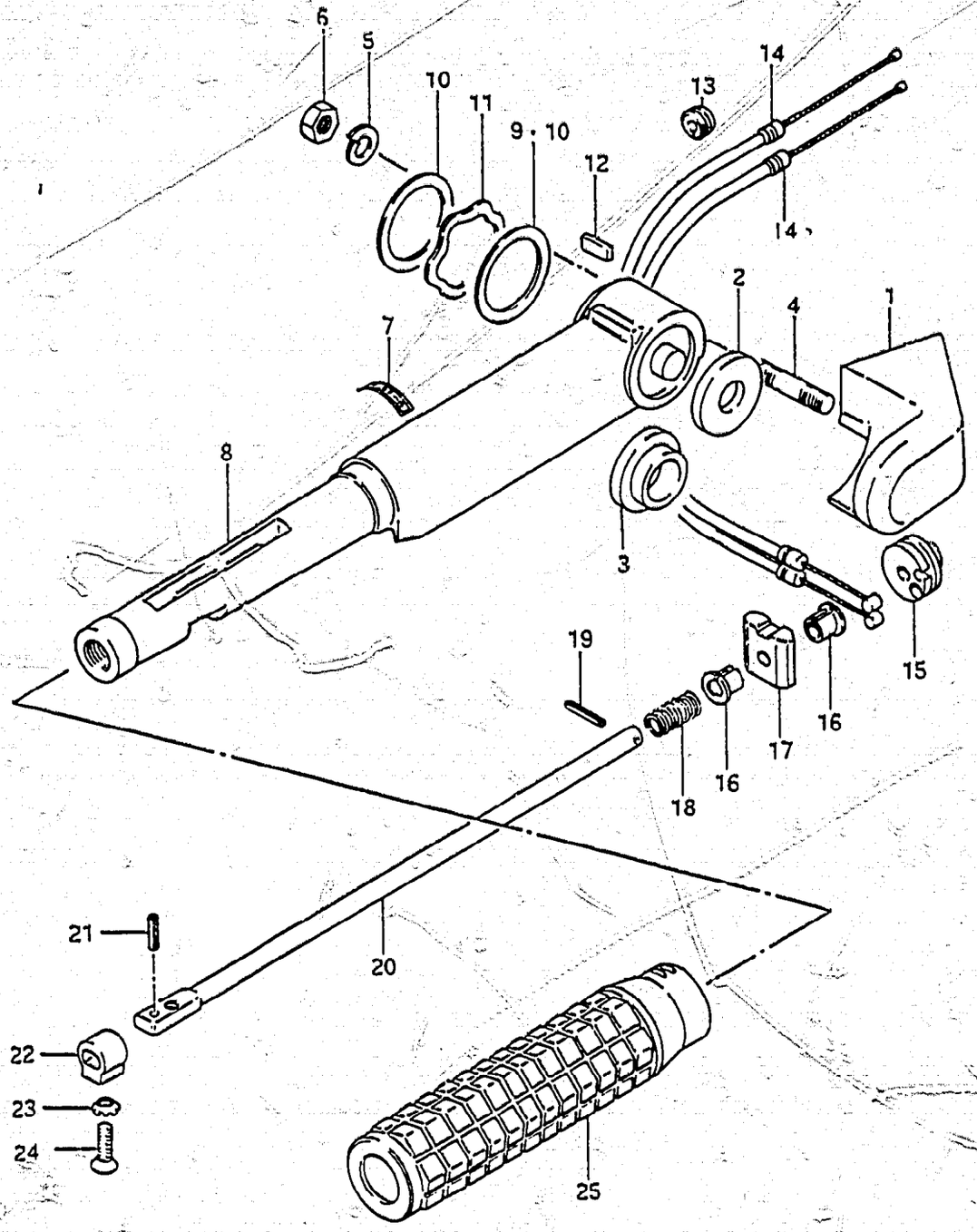

FIG.41 HANDLE (DT50MG)

Ref. No.	Part No.	Description	Q'ty 50	Remarks
		(DT50MG (E1, E3, E9, E13, E28))		
1-1	63121-94300-01J	COVER, tiller handle	1	to 63121-94301-01J
1-2	63121-94301-01J	COVER, tiller handle to (63121-94302-01J) + (63114-94300)	1	
1-3	63121-94302-01J	COVER, tiller handle	1	
2	63114-93200	SPACER (14x31x3.5)	1	
3	63114-94300	SPACER, handle cover	1	
4	09108-08036	STUD BOLT	2	
5	09162-08003	LOCK WASHER	2	
6	09140-08003	NUT	2	
7	63215-93101	MARK, handle grip	1	
8	63111-93401-01J	HANDLE, tiller	1	
9	09160-32007	WASHER (32.5x42x0.2)	AR(0~2)	
10	09160-32004	WASHER (32.5x42x0.5)	2	
11	09164-32001	WAVE WASHER	1	
12	63117-93400	PROTECTOR, stop switch wire	1	
13	09308-05015	GROMMET	3	
14-1	63610-95212	CABLE ASSY, throttle (grip→lever) A+B=78	2	from 63610-95211
14-2	63610-95213	CABLE ASSY, throttle (grip→lever) A+B=75	2	
15-1	63222-95200	DRUM, handle rod	1	to 63222-95201
15-2	63222-95201	DRUM, handle rod	1	
16	63225-93200	BUSHING	2	
17	63224-93202	PROTECTOR, stop switch wire	1	
18	63226-93200	SPRING	1	
19	09205-03004	PIN, handle rod (L:20)	1	
20	63221-93400	ROD, handle	1	
21	63227-93200	PIN, handle rod (L:14)	1	
22	63223-93200	STOPPER	1	
23	09163-06001	LOCK WASHER	1	
24	09126-06004	SCREW (6x20)	1	
25	63210-93200	GRIP, handle	1	

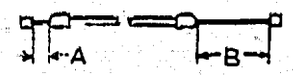

FIG.42 (F-14) : DT50MJ (E3, E9, E13, E28)
DT50MVZ (E1, E13, E28, E40)

FIG.42

F - 14

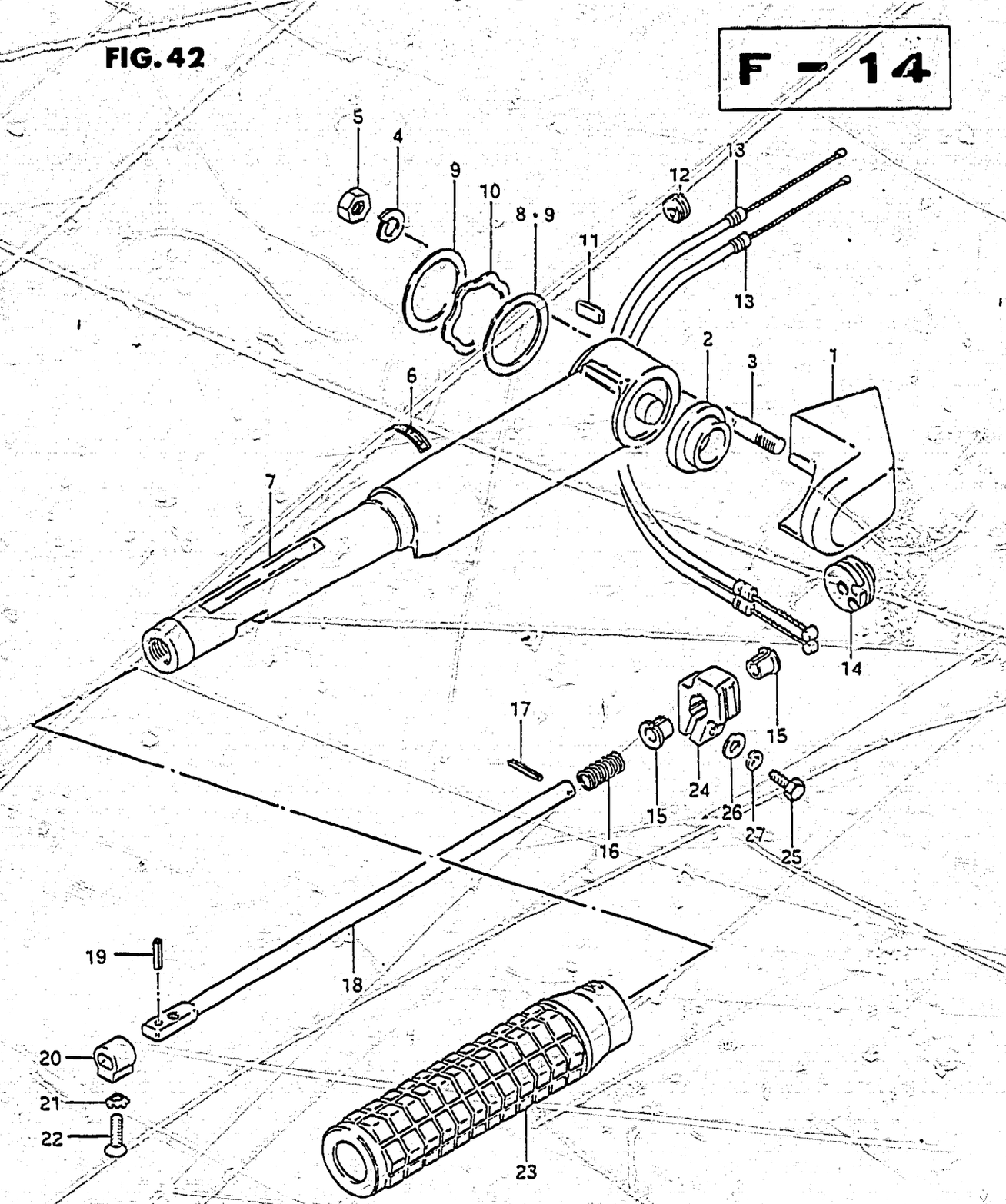

FIG.42 HANDLE (DT50MJ / MVZ)

Ref. No.	Part No.	Description	Q'ty 50	Remarks
		(DT50MJ (E3, E9, E13, E28)) (DT50MVZ (E1, E7, E13, E28, E40))		
1	63121-94302-01J	COVER, tiller handle	1	
2	63114-94300	SPACER, handle cover	1	
3	09109-08036	STUD BOLT	2	
4	09162-08003	LOCK WASHER	2	
5	09140-08003	NUT	2	
6	63215-93101	MARK, handle grip	1	
7	63111-93401-01J	HANDLE, tiller	1	
8	09160-32007	WASHER (32.5x42x0.2)	AR(0~2)	
9	09160-32004	WASHER (32.5x42x0.5)	2	
10	09164-32001	WAVE WASHER	1	
11	63117-93400	PROTECTOR, stop switch wire	1	
12	09308-05015	GROMMET	3	
13	63610-95213	CABLE ASSY, throttle (grip→lever) A+B=75	2	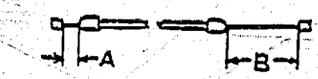
14	63222-95201	DRUM, handle rod	1	
15	63225-93200	BUSHING	2	
16	63226-93200	SPRING	1	
17	09205-03004	PIN, handle rod (L:20)	1	
18	63221-93400	ROD, handle	1	
19	63227-93200	PIN, handle rod (L:14)	1	
20	63223-93200	STOPPER	1	
21	09163-06001	LOCK WASHER	1	
22	09126-06004	SCREW (6x20)	1	
23	63210-93200	GRIP, handle	1	
24	63241-94300	ADJUSTER, handle grip	1	
25	09100-06020	BOLT, adjuster (6x20)	1	
26	09160-06015	WASHER	1	
27	09162-06001	LOCK WASHER	1	

FIG.41 (F-13) : DT50MG (E1, E3, E9, E13, E28)

FIG.43

G - 2

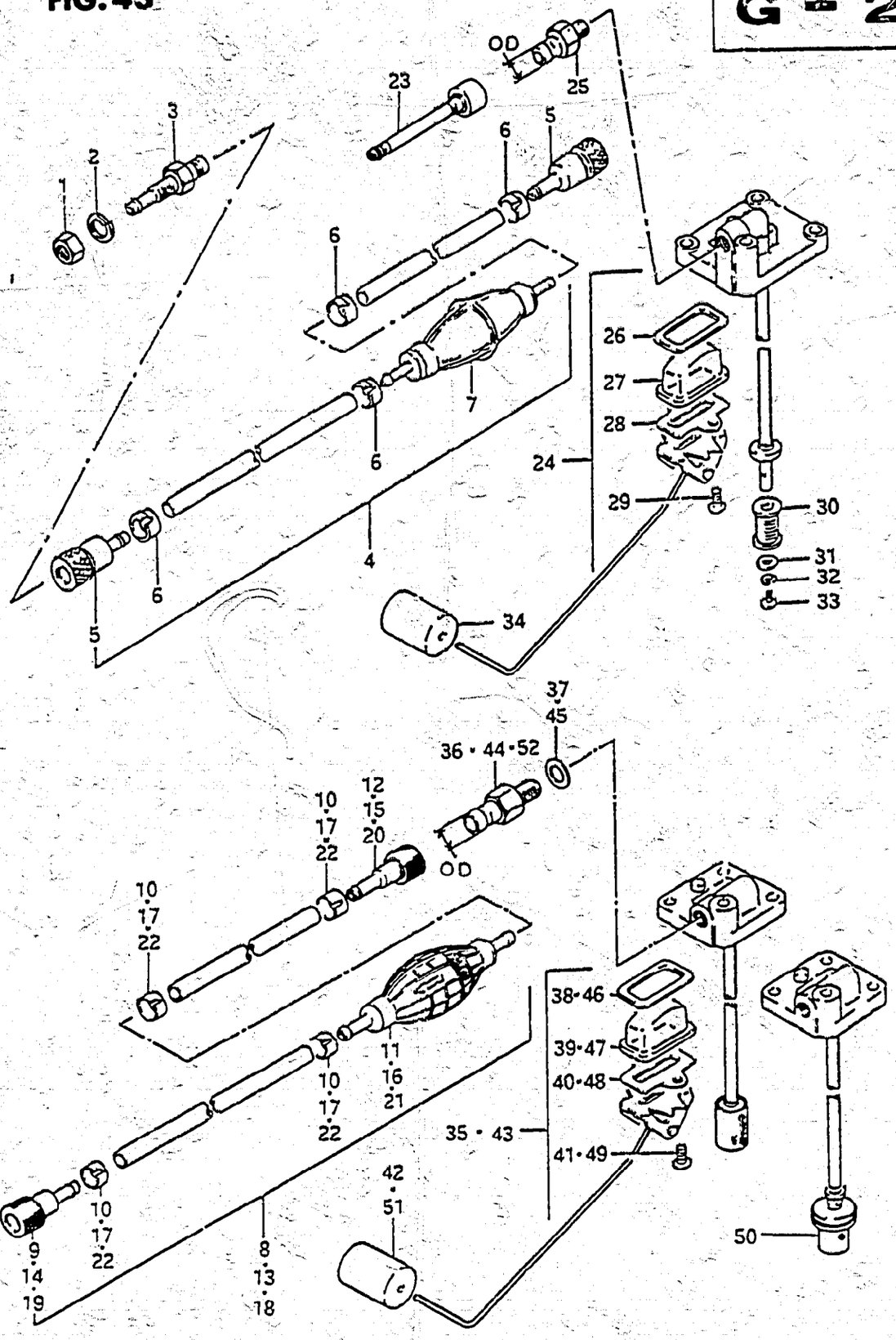

FIG.43 FUEL GAUGE / HOSE

Ref. No.	Part No.	Description	Q'ty 50/65	Remarks
1	08310-22108	NUT	1	
2	08321-21108	LOCK WASHER	1	
3-1	65720-98501	PLUG, fuel connector	1	model G to 65720-98502
3-2	65720-98502	PLUG, fuel connector	1	to 65720-98520
3-3	65720-98520	PLUG, fuel connector	1	
4	65700-95990	HOSE, fuel (L:2550)	1	from 65700-95201 to 65700-95202
5	65750-98990	•SOCKET, fuel hose (ID:11φ)	2	from 65750-98502 to 65750-98505
6	09401-13402	•CLIP	4	
7	65770-99701	•PUMP, squeeze to 65770-99702	1	model G
8	65700-95203	HOSE, fuel (L:2550) to 65700-95205	1	5001-001931~ 6501-001893~
9	65750-98990	•SOCKET, fuel hose to 65750-98505	1	ID:11φ
10	09401-13402	•CLIP	4	
11	65770-99701	•PUMP, squeeze	1	to 65770-99702
12	65750-93000	•SOCKET, fuel hose	1	ID:13φ
13	65700-95204	HOSE, fuel (L:2550)	1	
14	65750-98505	•SOCKET, fuel hose	1	ID:11φ
15	65750-93000	•SOCKET, fuel hose	1	ID:13φ
16	65770-99702	•PUMP, squeeze	1	model J
17	09401-13402	•CLIP	4	
18	65700-95205	HOSE, fuel (L:2550)	1	from 65700-95204
19	65750-98505	•SOCKET, fuel hose	1	
20	65750-93000	•SOCKET, fuel hose	1	model VZ
21	65770-99702	•PUMP, squeeze	1	
22	65781-98500	•CLIP	4	
23	65700-95270	HOSE, fuel joint	1	OPT

DT50, DT65

FIG.43

G - 3

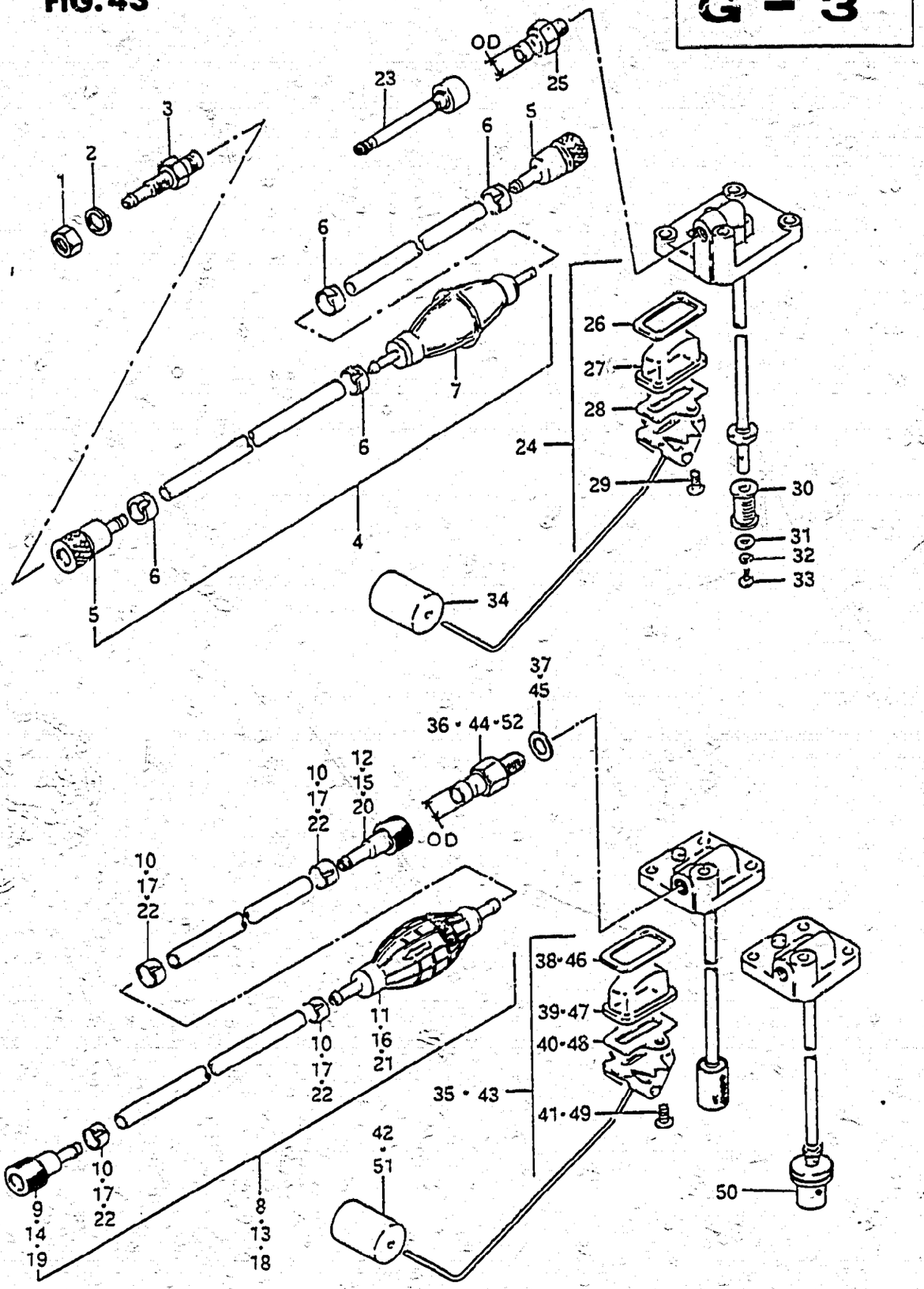

FIG.43 FUEL GAUGE / HOSE

Ref. No.	Part No.	Description	Q'ty 50/65	Remarks
24	65850-95212	GAUGE ASSY, fuel	1	~5001-001930 ~6501-001892
25	65720-98511	·PLUG, connector	1	M10,OD:11φ
26	65854-93001	·GASKET, strainer	1	
27	65853-93001	·STRAINER	1	
28	65862-93000	·GASKET	1	
29	02112-04108	·SCREW	2	
30	65830-93301	·FILTER	1	
31	08322-21058	·WASHER	1	
32	08321-21058	·LOCK WASHER	1	
33	02112-05088	·SCREW	1	model G
34	65864-93000	·FLOAT	1	
35	65850-95501	GAUGE ASSY, fuel	1	5001-001931~ 6501-001893~
36	65740-95500	·PLUG, connector	1	M12 OD:13φ
37	09168-12001	·GASKET	1	
38	65854-93001	·GASKET, strainer	1	
39	65853-93001	·STRAINER	1	
40	65862-93000	·GASKET	1	
41	02112-04108	·SCREW	2	
42	65864-93000	·FLOAT	1	
43	65850-95503	GAUGE ASSY, fuel	1	
44	65740-95500	·PLUG, connector	1	M12 OD:13φ
45	09168-12001	·GASKET	1	
46	65854-93001	·GASKET, strainer	1	
47	65853-93001	·STRAINER	1	model J/VZ
48	65862-93000	·GASKET	1	
49	02112-04108	·SCREW	2	
50	65830-95500	·FILTER	1	
51	65864-95200	·FLOAT	1	
52	65720-98590	PLUG, connector	1	OPT M12 OD:11φ

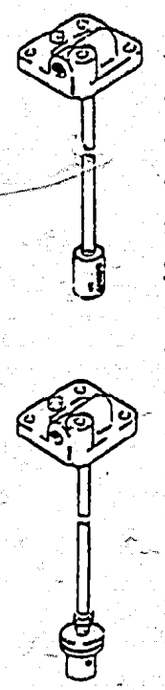

DT50, DT65

FIG.44

G - 4

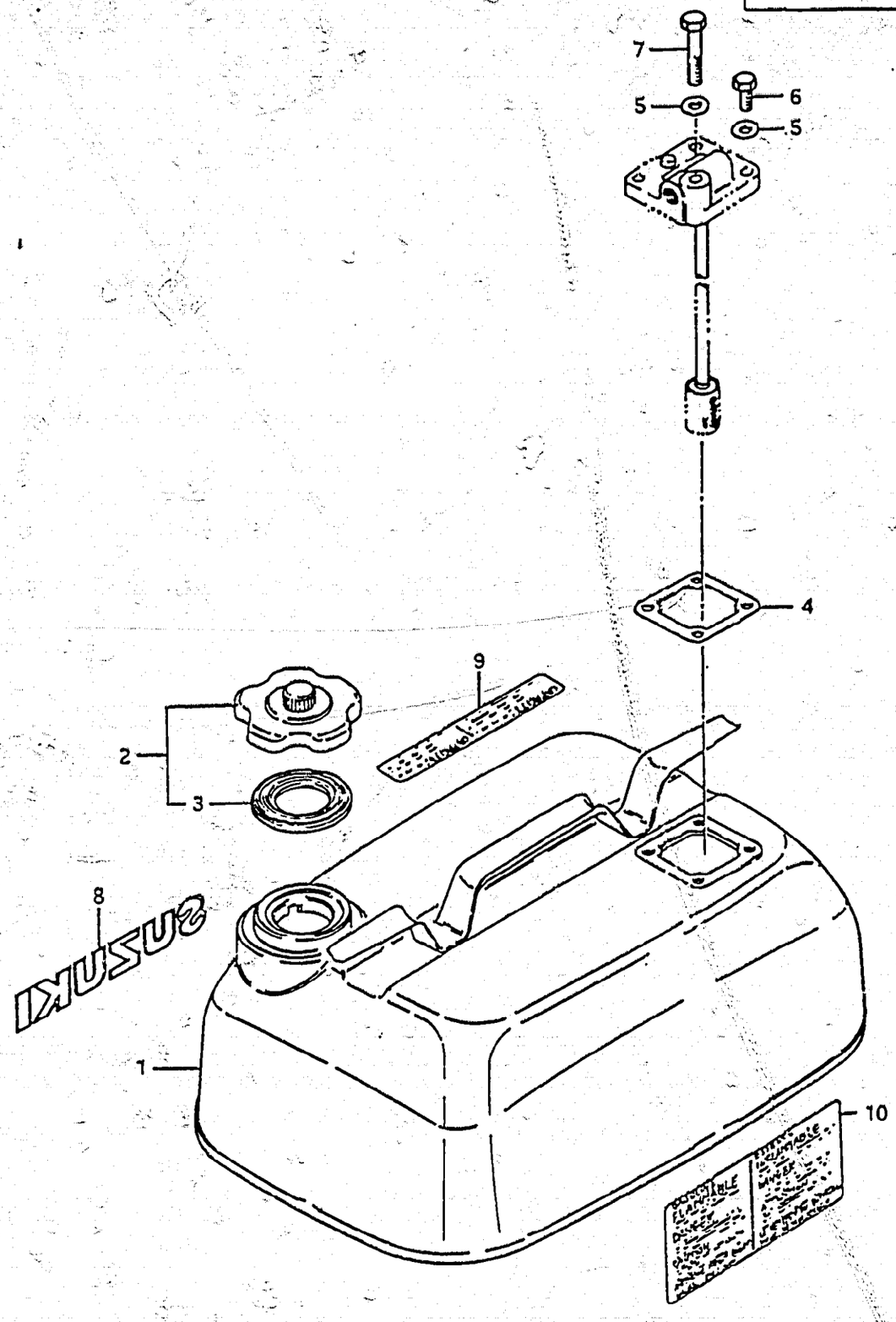

FIG.44 FUEL TANK

Ref. No.	Part No.	Description	Q'ty 50/65	Remarks
1-1	65800-95814	TANK SET, fuel (23ℓ) (5 IMP.GAL)(6 U.SGAL)	1	model G Incl Ref.No.2~7
1-2	65800-95815	TANK SET, fuel (23ℓ) (5 IMP.GAL)(6 U.SGAL)	1	from 65800-95814 to 65800-95816
1-3	65800-95816	TANK SET, fuel (23ℓ) (5 IMP.GAL)(6 U.SGAL)	1	
2-1	65510-98503	·CAP ASSY, tank	1	model G
2-2	65510-98504	·CAP ASSY, tank	1	from 65510-98503
2-3	65510-98505	·CAP ASSY, tank	1	
3-1	65561-98501	··GASKET, tank cap	1	to 65561-98502 model G
3-2	65561-98502	··GASKET, tank cap	1	
4	65871-93001	·GASKET, fuel gauge	1	
5	08322-21068	·WASHER	4	
6	01107-06168	·BOLT	3	
7	01107-06408	·BOLT	1	
8	61441-98500	MARK, ornament	1	
9	65317-95200	MARK, fuel capacity	1	
10	65316-93303	MARK, fuel caution	1	

FIG.45 (G-5) : E28

FIG.45

G - 5

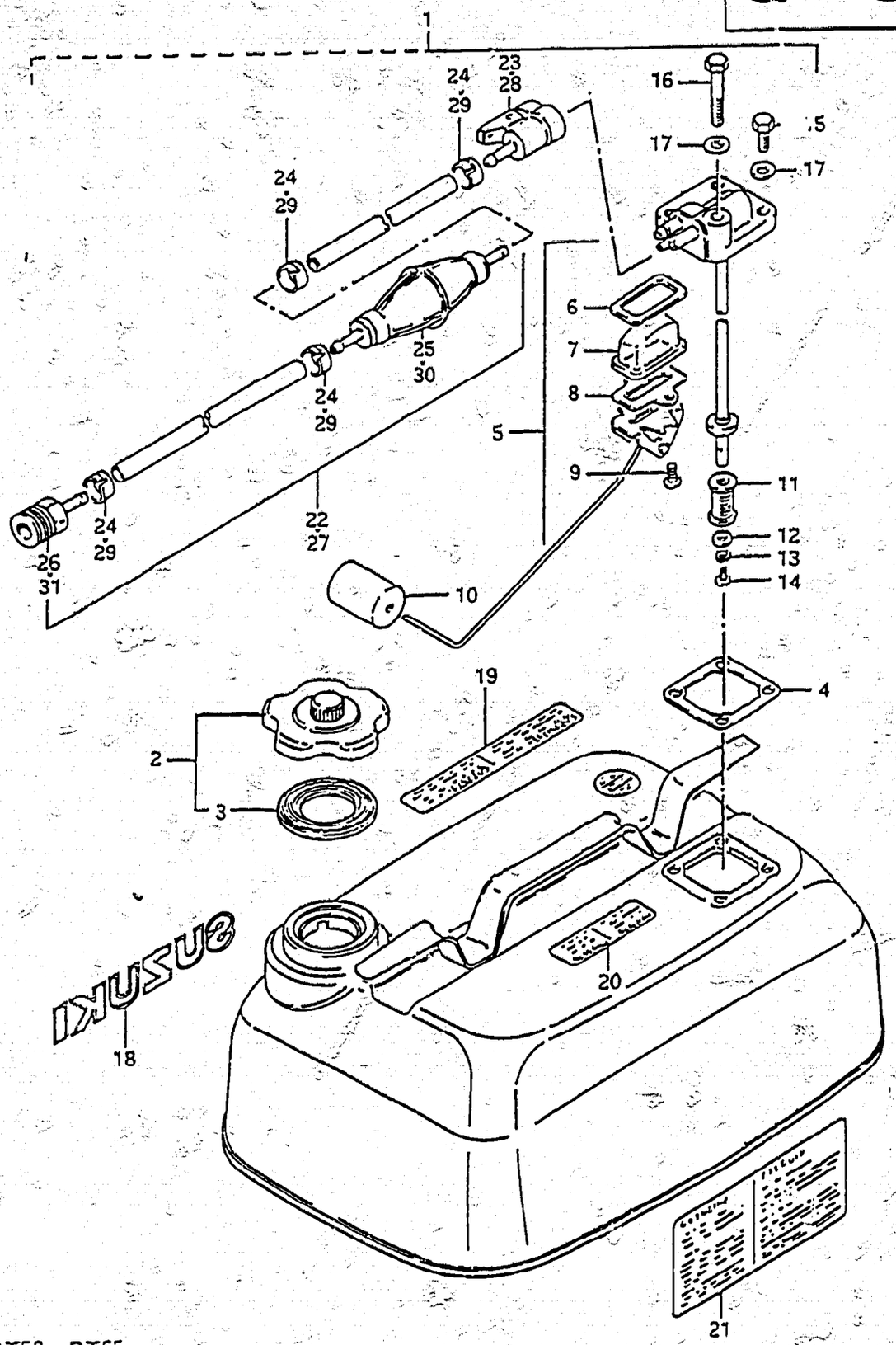

FIG.45 FUEL TANK (E28)

Ref. No.	Part No.	Description	Q'ty 50/65	Remarks
1	65800-95862	TANK SET, fuel (23ℓ)(6 U.S.GAL)(5 IMP.GAL)	1	Incl Ref.No.2~21 from 65800-95861 to 65800-95863
2	65510-98504	·CAP ASSY, fuel tank	1	to 65510-98505
3	65561-98502	··GASKET, fuel gauge	1	
4	65871-93001	·GASKET, fuel gauge	1	
5	65850-95201	·GAUGE ASSY, fuel	1	
6	65854-93001	··GASKET, strainer	1	
7	65853-93001	··STRAINER	1	
8	65862-93000	··GASKET, arm holder	1	
9	02112-04108	··SCREW	2	
10	65864-93000	··FLOAT	1	
11	65830-93301	··FILTER, outlet	1	
12	08322-21058	··WASHER	1	
13	08321-21058	··LOCK WASHER	1	
14	02112-05088	··SCREW	1	
15	01107-06168	·BOLT	3	
16	01107-06408	·BOLT	1	
17	08322-21068	·WASHER	4	
18	61441-98500	·MARK, ornament	1	
19	65317-95200	·MARK, fuel capacity	1	
20	65319-95200	·MARK, fuel tank model	1	
21	65316-93303	·MARK, fuel caution	1	
22-1	65700-98513	HOSE, fuel	1	from 65700-98513 to 65700-95991
22-2	65700-98990	HOSE, fuel	1	
23	65750-99700	·SOCKET, fuel hose	1	model G to 65770-99702
24	09401-13402	·CLIP	4	
25	65770-99701	·PUMP, squeeze	1	
26-1	65750-98502	·SOCKET, fuel hose	1	from 65750-98502 to 65750-98505
26-2	65750-98990	·SOCKET, fuel hose	1	
27	65700-98530	HOSE, fuel	1	model J/VZ
28	65750-99700	·SOCKET, fuel hose	1	
29	09401-13402	·CLIP	4	
30	65770-98520	·PUMP, squeeze	1	
31	65750-98505	·SOCKET, fuel hose	1	

FIG.44 (G-4) : E1

DT50, DT65

FIG.46

G - 6

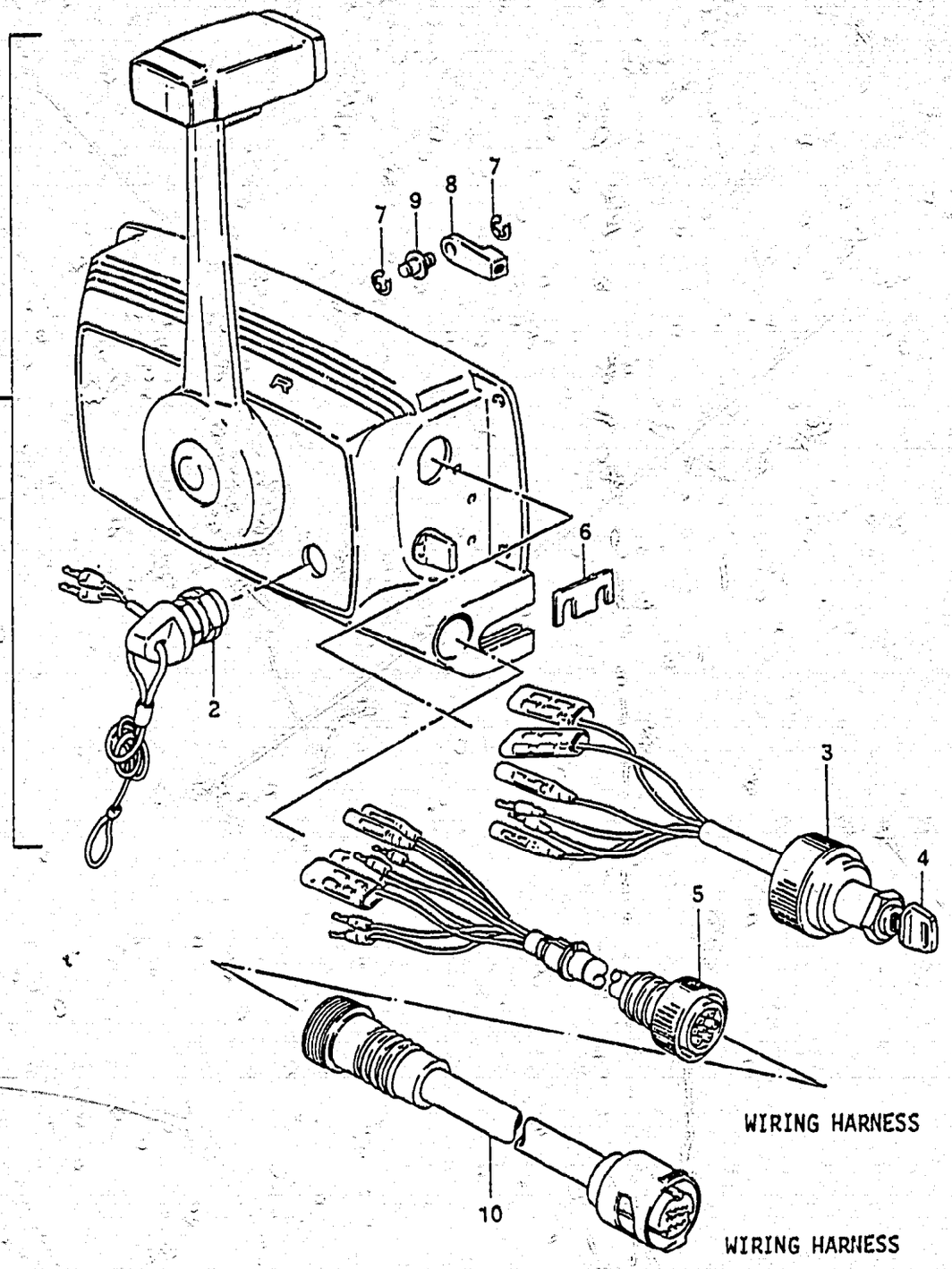

FIG.46 REMOTE CONTROL (1)

Ref. No.	Part No.	Description	Q'ty 50/65	Remarks
1-1	67200-95302	REMOTE CONTROL BOX	1	T.S.K model TG to 67200-95303
1-2	67200-95303	REMOTE CONTROL BOX	1	T.S.K model TG
2-1	37820-95200	·SWITCH ASSY, emergency	1	
2-2	37820-95201	·SWITCH ASSY, emergency	1	from 37820-95200
3	37110-95351	·SWITCH ASSY, ignition	1	from 37110-95350
4-1	37141-93300	··KEY, spare (8511)	1	OPT
4-2	37141-93310	··KEY, spare (8512)	1	
4-3	37141-93320	··KEY, spare (8513)	1	
4-4	37141-93330	··KEY, spare (8611)	1	
4-5	37141-93340	··KEY, spare (8612)	1	
4-6	37141-93350	··KEY, spare (8613)	1	
5	36630-95302	·CONNECTOR, wiring harness	1	
6	67272-95300	·HOLDER, control cable	1	
7	67268-95300	·E RING	4	
8	67271-95300	·EYEEND, control cable	2	
9	67274-95300	·PIN, eyeend	2	
10	36641-94700	ADAPTOR O.N (OLD CONNECTOR → NEW CONNECTOR)	1	OPT

DT50, DT65

FIG.47

G - 7

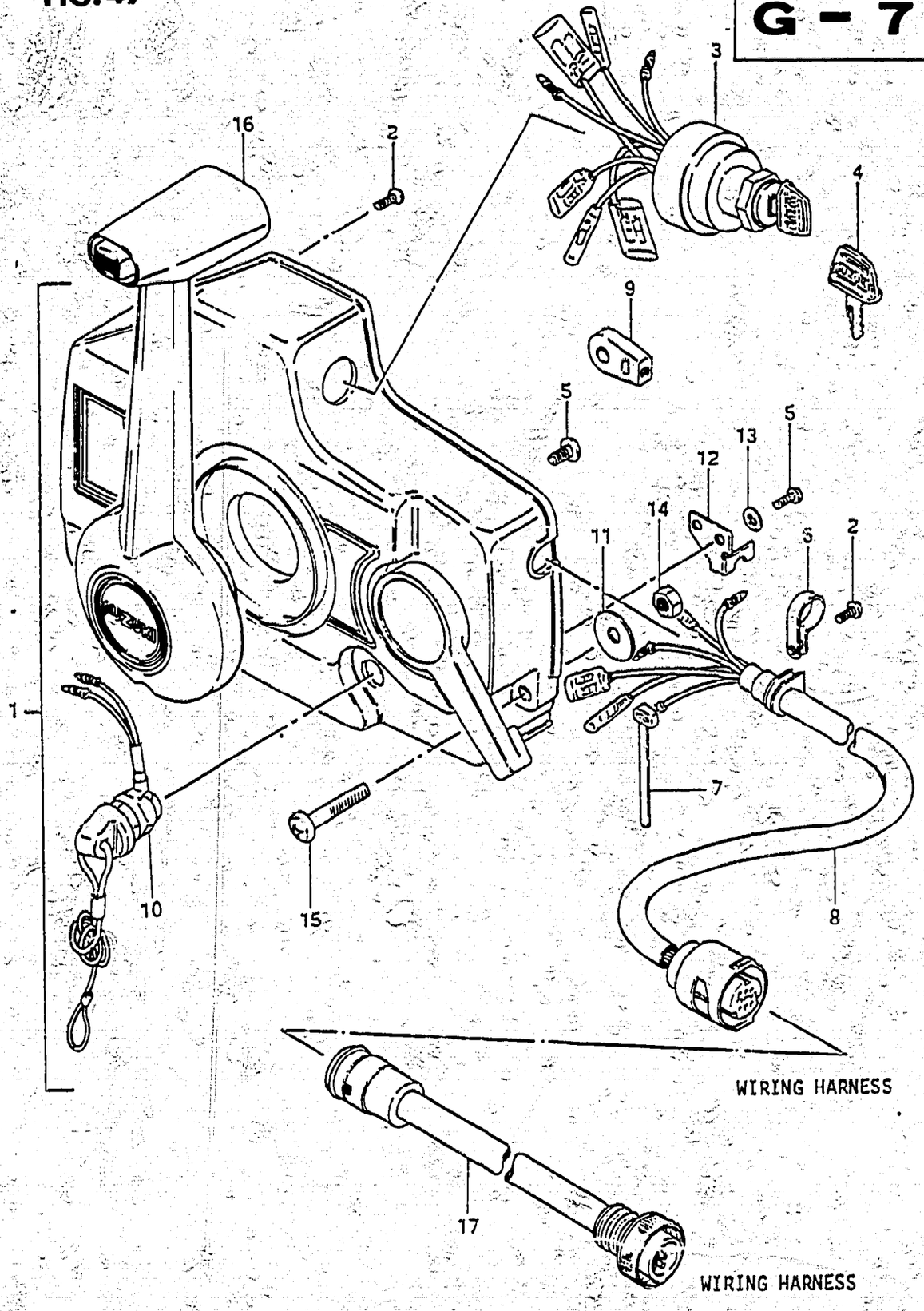

FIG.47 REMOTE CONTROL (2)

Ref. No.	Part No.	Description	Q'ty 50/65	Remarks
1-1	67200-94300	REMOTE CONTROL BOX	1	model TJ,MVZ···OPT NHK·MORSE
1-2	67200-95340	REMOTE CONTROL BOX	1	model TVZ
2	67296-94300	·SCREW	4	
3	37110-94300	·SWITCH ASSY, ignition	1	
4-1	37141-93300	··KEY, spare (8511)	1	OPT
4-2	37141-93310	··KEY, spare (8512)	1	
4-3	37141-93320	··KEY, spare (8513)	1	
4-4	37141-93330	··KEY, spare (8611)	1	
4-5	37141-93340	··KEY, spare (8612)	1	
4-6	37141-93350	··KEY, spare (8613)	1	
5	67296-94310	·SCREW	4	
6	36622-94300	·CLAMP	1	
7	36632-95501	·CLAMP	1	
8	36620-94300	·WIRING HARNESS, extension	1	
9	67275-94300	·CABLE END	2	
10-1	37820-95251	·SWITCH, emergency	1	
10-2	37820-95252	·SWITCH, emergency	1	←37820-95251
11	67288-94300	·WASHER	2	
12	67271-94300	·HOLDER, cable	1	
13	67288-94310	·WASHER	3	
14	09140-06004	·NUT	3	
15	09125-06012	·SCREW	3	
16	67250-95300	·LEVER ASSY	1	Inner parts of 67200-95340
17	36642-94700	ADAPTOR N.O (NEW CONNECTOR → OLD CONNECTOR)	1	

DT50, DT65

FIG.48

G-8

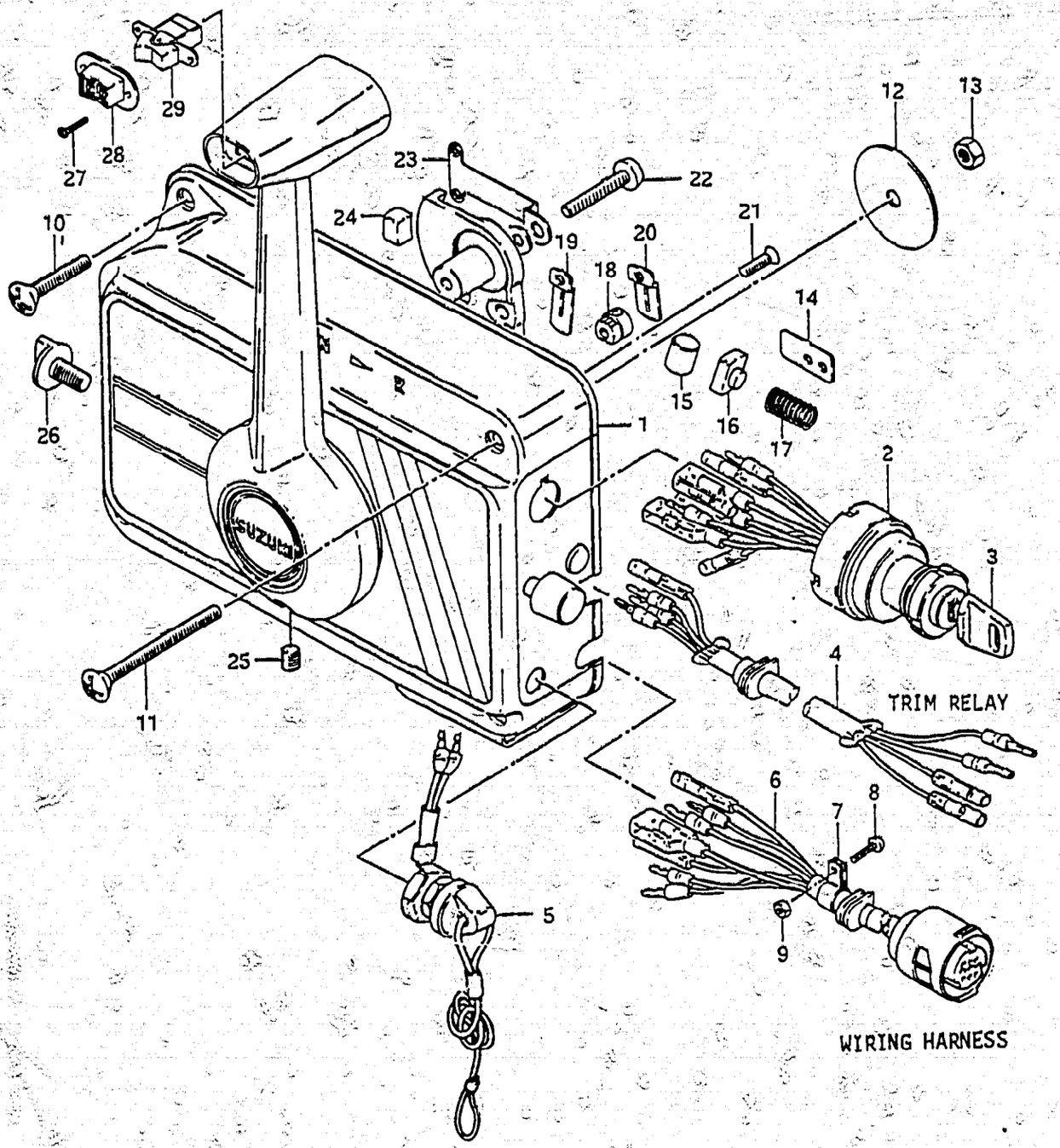

FIG.48 REMOTE CONTROL (3)

Ref. No.	Part No.	Description	Q'ty 50/65	Remarks
		(DT50/DT65G E3, G E28)		
1-1	67200-95320-01T	REMOTE CONTROL BOX	1	Incl Ref.No.2~29 NHK·MORSE
1-2	67200-95321-01T	REMOTE CONTROL BOX	1	Exclude Ref.No.4,29
2	37110-95551	·SWITCH ASSY, ignition	1	from 37110-95550
3-1	37141-93300	··KEY, spare (8511)	1	OPT
3-2	37141-93310	··KEY, spare (8512)	1	
3-3	37141-93320	··KEY, spare (8513)	1	
3-4	37141-93330	··KEY, spare (8611)	1	
3-5	37141-93340	··KEY, spare (8612)	1	
3-6	37141-93350	··KEY, spare (8613)	1	
4-1	36630-95551	·CABLE ASSY, trim relay	1	
4-2	36630-95552	·CABLE ASSY, trim relay	1	from 36630-95551
5-1	37820-95252	·SWITCH ASSY, emergency	1	
5-2	37820-95253	·SWITCH ASSY, emergency	1	from 37820-95252
6	36620-95550	·WIRING HARNESS (L:4900)	1	model G
7-1	36632-95500	·CLAMP (ALMINIUM)	2	
7-2	36632-95501	·CLAMP (NYLON)	2	from 36632-95500
8	02112-04168	·SCREW	2	
9	08310-11048	·NUT	2	
10	02132-06408	·SCREW (L:40)	1	
11	02132-06758	·SCREW (L:75)	3	
12	09160-06047	·WASHER (6.5x22x2)	4	
13	08310-11068	·NUT	4	
14	67271-95500	·PLATE	2	
15	67253-95500	·ROLLER	1	
16	67254-95500	·BUSHING	1	
17	67255-95500	·SPRING	1	
18	67275-95500	·TRUNNION	2	
19	67272-95500	·RETAINER, clutch	1	
20	67274-95500	·RETAINER, throttle	1	

DT50, DT65

FIG.48

G - 9

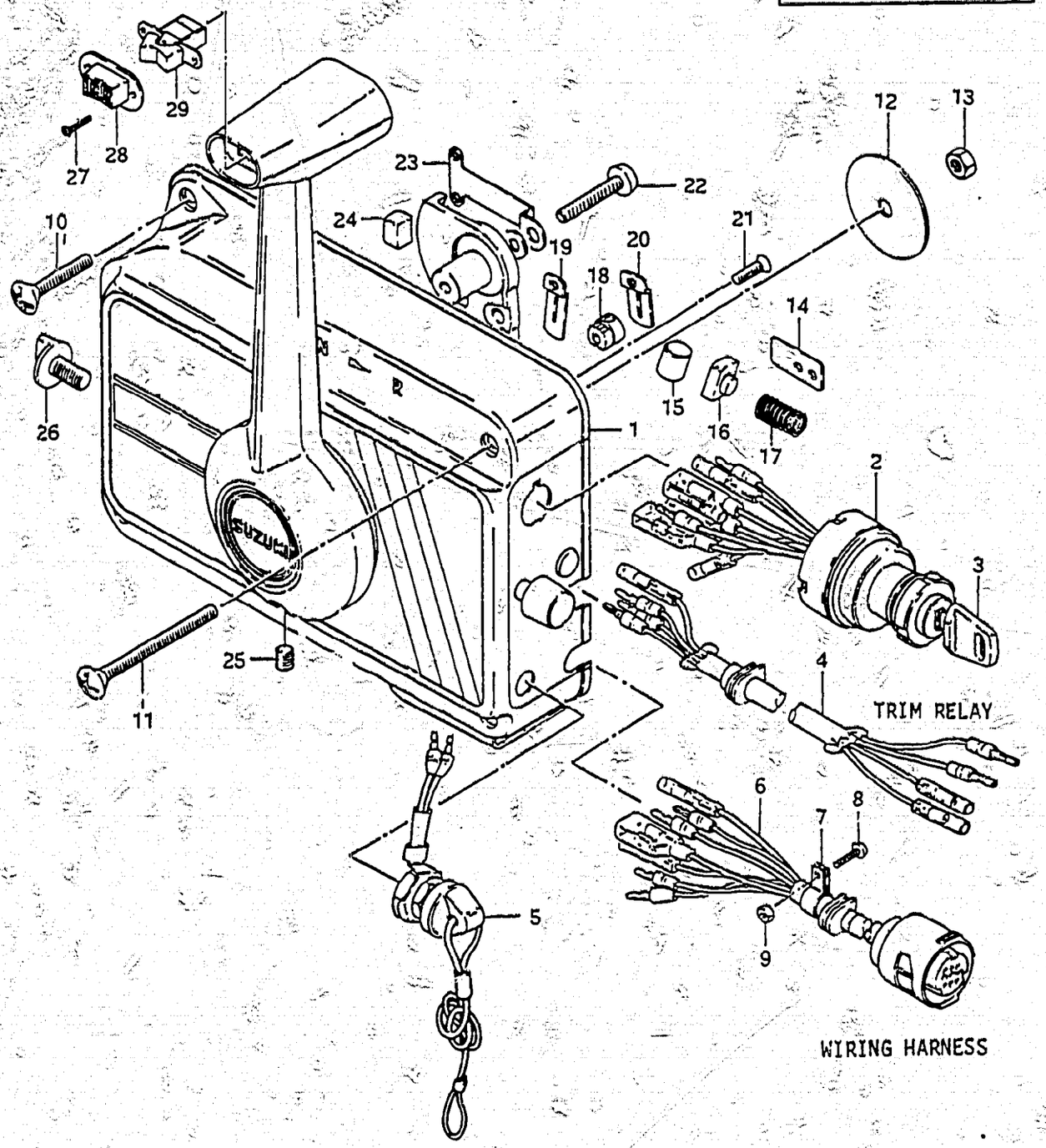

FIG.48 REMOTE CONTROL (3)

Ref. No.	Part No.	Description	Q'ty 50/65	Remarks
		(DT50/DT65G E3, G E28)		
21	02122-04128	·SCREW	4	model G
22	02112-06358	·SCREW	1	
23	67233-95500	·RETAINER	1	
24	67234-95500	·SHOE, friction	1	
25	67249-95500	·SCREW	1	
26	67232-95500	·KNOB, brake	1	
27	09139-02003	·SCREW	2	
28	37864-95500	·CAP, switch	1	
29	37860-95551	·SWITCH ASSY, trim	1	to 37860-95552

DT50, DT65

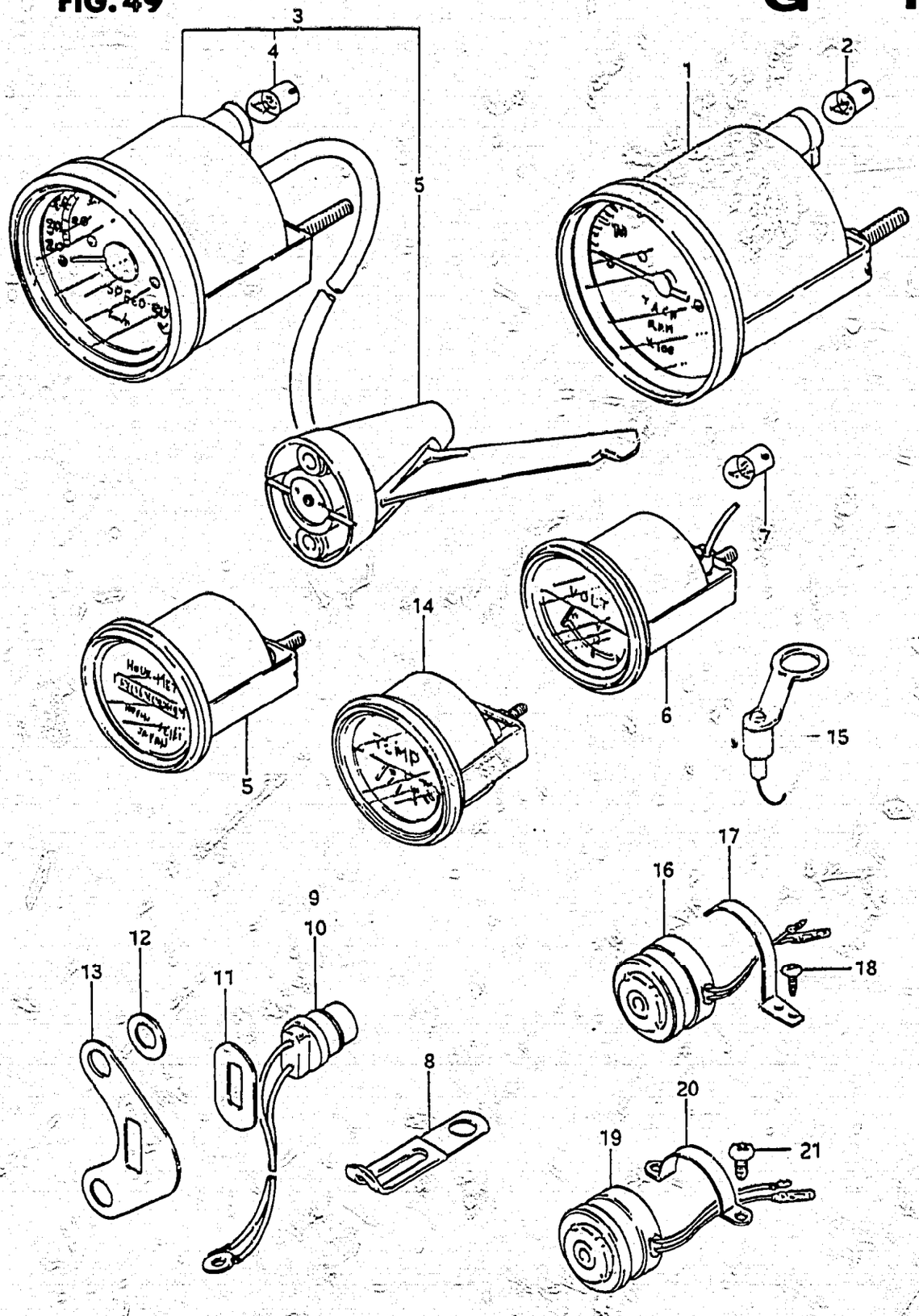

FIG. 49 OPT : ELECTRICAL (1)

Ref. No.	Part No.	Description	Q'ty 50	Q'ty 65	Remarks
1	34200-95500	TACHOMETER ASSY	1	1	
2	09471-12001	·LAMP (12V,3.4W)	1	1	
3-1	34100-95500	SPEEDOMETER ASSY	1	1	model G
3-2	34100-95501	SPEEDOMETER ASSY	1	1	from 34100-95500
4	09471-12001	·LAMP (12V,3.4W)	1	1	
5	34190-95500	SENSOR	1	1	
6-1	34500-95500	HOUR METER ASSY	1	1	to 34500-95501
6-2	34500-95501	HOUR METER ASSY	1	1	
7-1	34600-95500	VOLT METER ASSY	1	1	to 34600-95501
7-2	34600-95501	VOLT METER ASSY	1	1	
8	09471-12001	·LAMP (12V,3.4W)	1	1	
9	09404-10401	CLAMP, heat switch	1	1	
10	34850-95554	THERMO UNIT	1	-	For Over Heat Warning Buzzer to 34850-95510
11	34850-95510	THERMO UNIT (Incl grease)	1	1	
12	34854-95300	FILLER, heat switch	1	1	
13	09160-10026	WASHER, heat switch	1	1	
14	34853-95500	SUPPORTER, heat switch	1	1	
15	34400-95722	THERMO METER ASSY	1	1	
16	34840-95700	THERMO UNIT	1	1	
17	38500-95201	BUZZER, warning	1	1	model G
18	38501-95200	BAND	1	1	
19	03212-04089	SCREW	2	2	
20	38500-95502	BUZZER, warning	1	1	model J/VZ
21	38501-95500	BAND	1	1	
22	02112-05088	SCREW	2	2	

FIG.50

G - 11

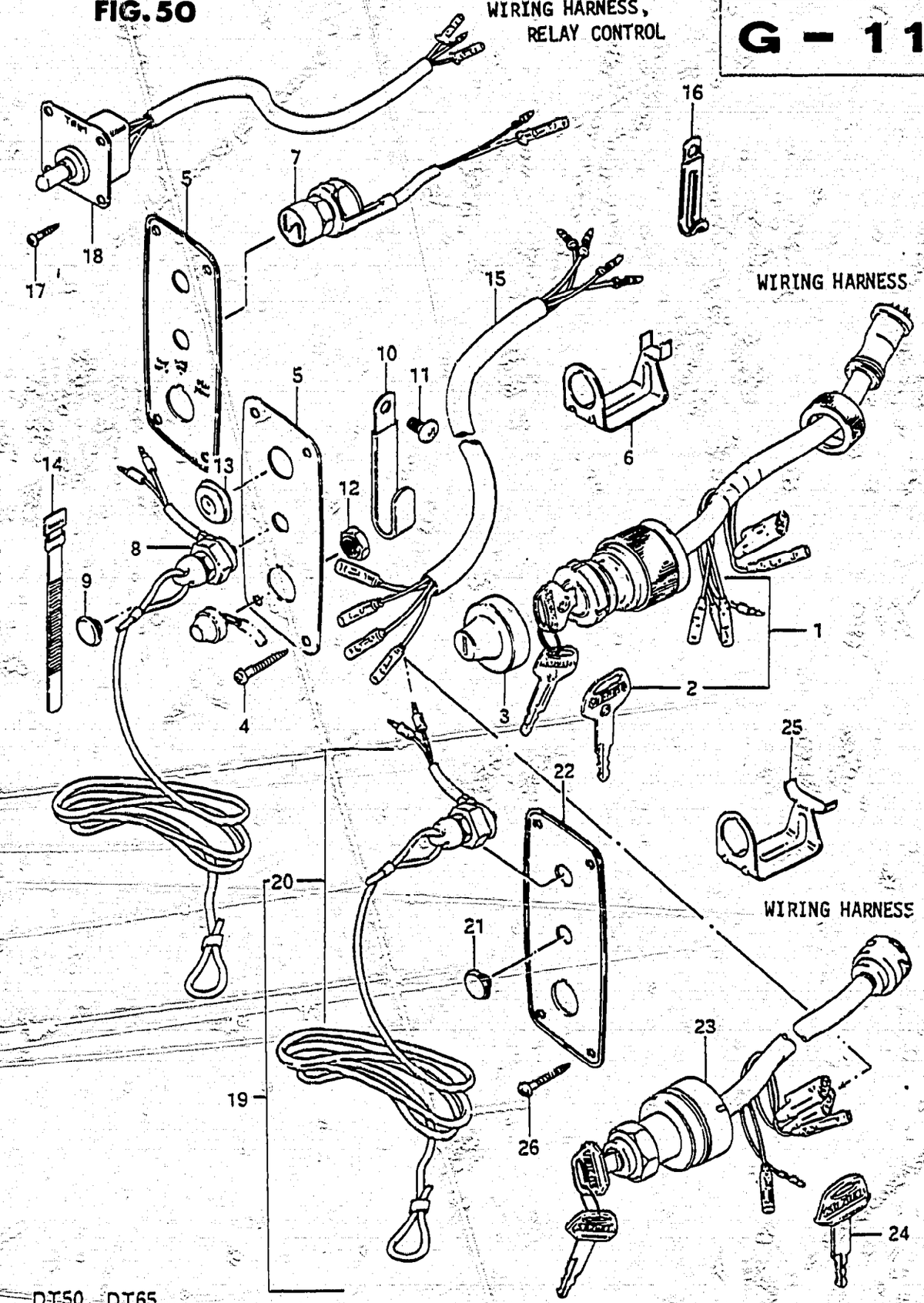

FIG.50 OPT : ELECTRICAL (2)

Ref. No.	Part No.	Description	Q'ty 50/65	Remarks
1	37110-95251	SWITCH, ignition	1	
2-1	37141-95200	KEY, spare (8111)	1	
2-2	37141-95210	KEY, spare (8112)	1	
2-3	37141-95220	KEY, spare (8113)	1	model G
2-4	37141-95230	KEY, spare (8211)	1	
2-5	37141-95240	KEY, spare (8212)	1	
2-6	37141-95250	KEY, spare (8213)	1	
3	37921-97001	COVER, ignition switch	1	
4	03112-05209	SCREW	4	
5-1	37139-95251	PLATE, ignition switch	1	
5-2	37139-95200	PLATE, engine stop switch	1	DT50M H:23
6	37150-95250	HOLDER, switch	1	
7	37860-95250	SWITCH, choke solenoid	1	model G
8	37820-95352	SWITCH, emergency	1	from 37820-95351
9	37101-93301	CAP, panel	1	
10	09404-06414	CLAMP, dash board switch	1	
11	02142-06127	SCREW	1	
12	37871-95201	NUT, stop switch	1	from 37871-95200
13	09250-20009	CAP, switch plate	1	
14	09407-12402	CLAMP, stop switch	1	DT50M
15	36630-95250	WIRING HARNESS, stop switch	1	
16	09404-10601	CLAMP, wiring harness	1	
17	03112-04129	SCREW	4	TVZ···STD
18	37850-95251	SWITCH, dash board	1	from 37850-95250
19	37100-95210	PANEL ASSY, switch	1	
20	37820-95352	·SWITCH, emergency	1	
21	37101-93301	·CAP	1	
22	37139-95251	·PANEL, switch	1	
23	37110-95210	·SWITCH, ignition	1	
24-1	37141-93300	··KEY, spare (8511)	1	
24-2	37141-93310	··KEY, spare (8512)	1	model J/VZ
24-3	37141-93320	··KEY, spare (8513)	1	
24-4	37141-93330	··KEY, spare (8611)	1	
24-5	37141-93340	··KEY, spare (8612)	1	
24-6	37141-93350	··KEY, spare (8613)	1	
25	37150-93350	·HOLDER	1	H:27.1
26	03112-05209	SCREW	4	

DT50, DT65

FIG.51

G - 12

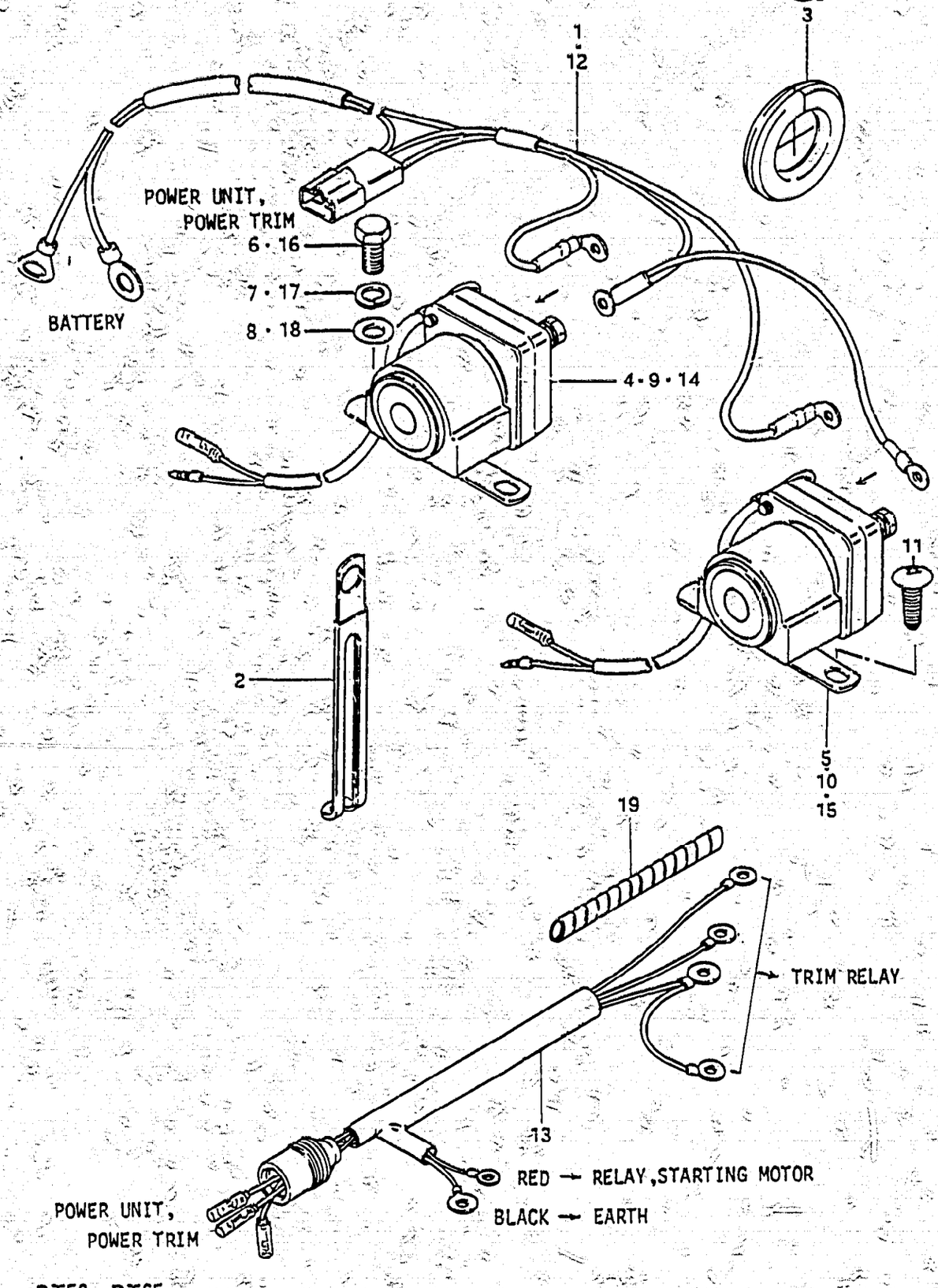

FIG.51 OPT : ELECTRICAL (3)

Ref. No.	Part No.	Description	Q'ty 50/65	Remarks
1	33830-95500	CABLE ASSY, trim relay in	1	L:840
2	09404-10404	CLAMP, trim relay	1	
3	36656-93300	GROMMET	1	
4	38410-95540	TRIM RELAY, up in	1	for 33830-95500 model G
5	38420-95540	TRIM RELAY, down in	1	
6	09100-06019	BOLT	4	
7	09162-06001	LOCK WASHER	4	
8	09160-06015	WASHER	4	
9	38410-95540	TRIM RELAY, up	1	from 38410-95500
10	38420-95540	TRIM RELAY, down from 38420-95500	1	for 33830-95551 model G
11	03142-06209	SCREW	4	
12	33830-95551	CABLE, trim relay	1	L:1800
13	33830-95202	CABLE, trim relay in	1	
14	38410-95540	TRIM RELAY, up in	1	for 33830-95202 model J/VZ
15	38420-95540	TRIM RELAY, down in	1	
16	09100-06019	BOLT	4	
17	09162-06001	LOCK WASHER	4	
18	09160-06015	WASHER	4	
19	38423-95501	TUBE, trim relay lead	3	L:150 2pcs, L:150→100

DT50, DT65

FIG.52

G - 13

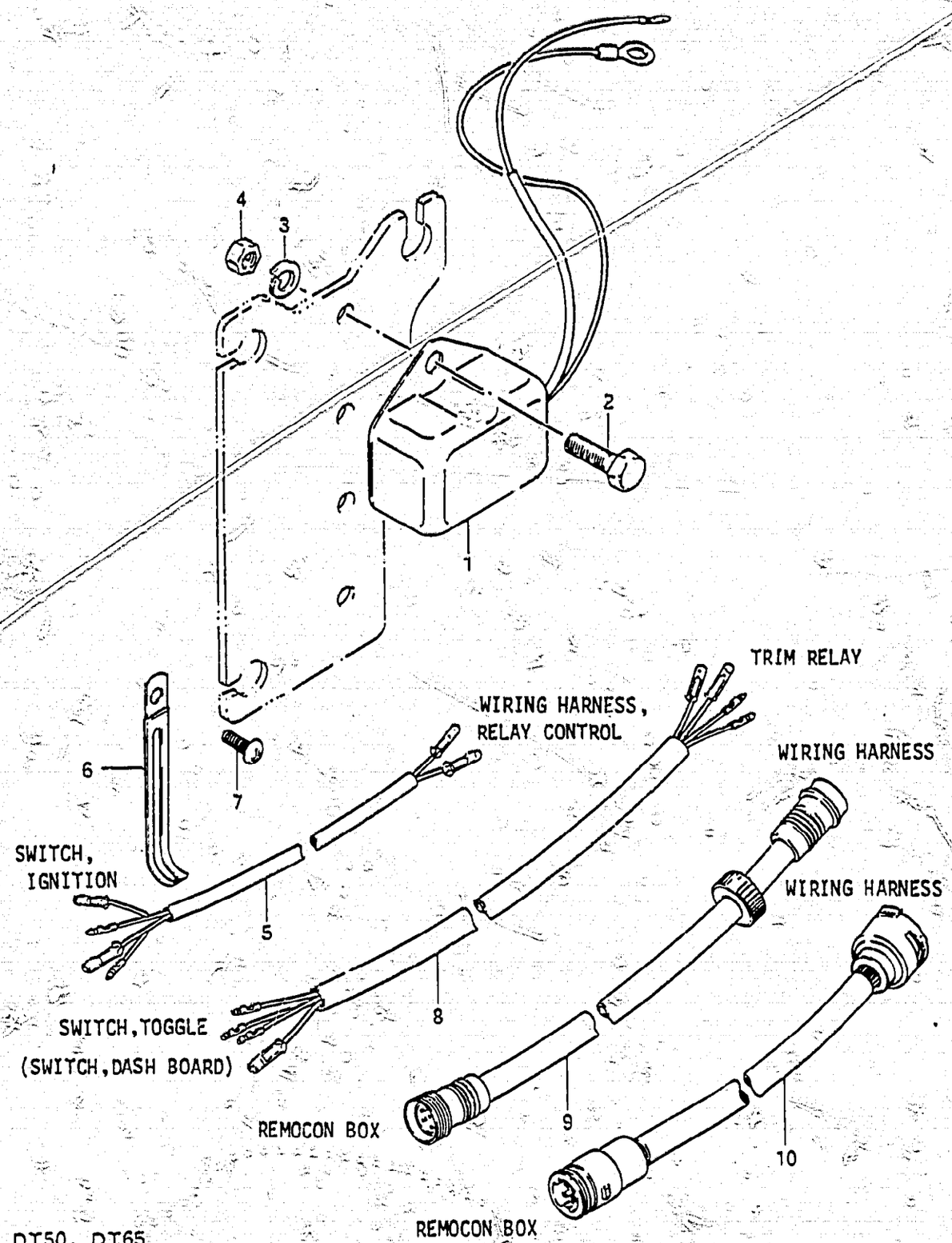

FIG.52 OPT : ELECTRICAL (4)

Ref. No.	Part No.	Description	Q'ty 50/65	Remarks
1	32500-95721	REGULATOR ASSY, voltage	1	
2	01107-06208	BOLT	2	
3	08321-21068	LOCK WASHER	2	
4	08310-11068	NUT	2	
5-1	37853-95250	WIRING HARNESS, toggle switch	1	model G
5-2	37853-95251	WIRING HARNESS, toggle switch	1	model J/VZ TVZ···STD
6	09404-06414	CLAMP, harness	1	
7	02142-06128	SCREW	1	
8-1	36630-95552	WIRING HARNESS, relay control	1	from 36630-95551 model G
8-2	36640-95500	WIRING HARNESS, relay control	1	from 36630-95553 TVZ···STD
9	36620-95250	WIRING HARNESS, extension	1	model G
10	36620-95200	WIRING HARNESS, extension	1	model J/VZ

DT50, DT65

FIG.53

G - 14

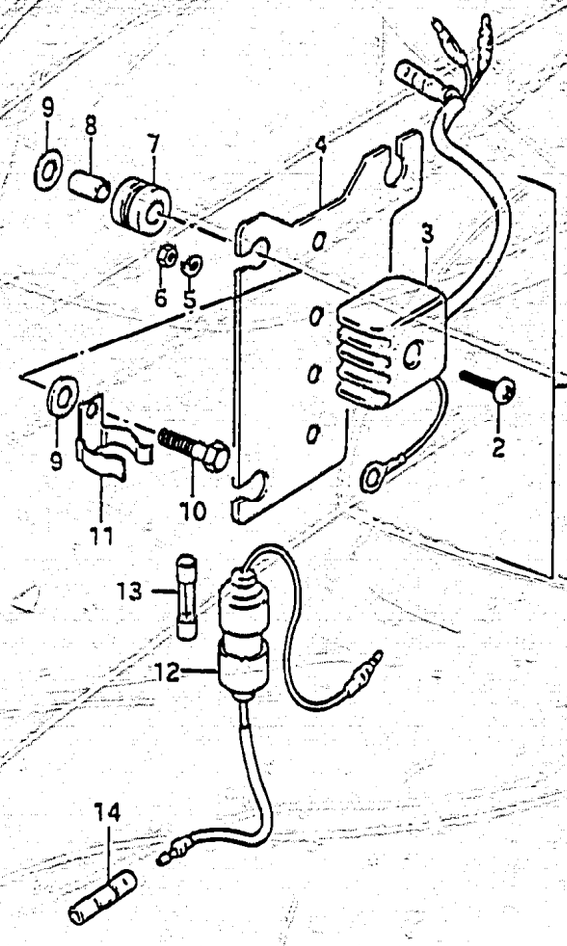

72

FIG.53 OPT : ELECTRICAL (DT50M)

Ref. No.	Part No.	Description	Q'ty 50	Remarks
		(DT50MG (E1, E3, E9, E13, E28)) (DT50MJ (E3, E9, E13, E28)) (DT50MVZ (E1, E7, E13, E28, E40))		
1	32801-95200	RECTIFIRE SET	1	
2	02112-05258	·SCREW	1	
3	32800-95720	·RECTIFIRE ASSY	1	
4	32890-95201	·HOLDER, parts	1	
5	08321-21058	·LOCK WASHER	1	
6	08310-11058	·NUT	1	
7	09320-08015	·CUSHION	3	
8	09180-06035	·SPACER (6.1x8x12)	3	
9	09160-06052	·WASHER	3	
10	01107-06258	·BOLT	3	
11	36791-95200	·HOLDER, fuse case	1	
12	36740-95252	·CASE ASSY, fuse	1	
13	09481-20001	··FUSE (20A)	1	
14	37132-93700	·CONNECTOR	1	

FIG.54

H - 2

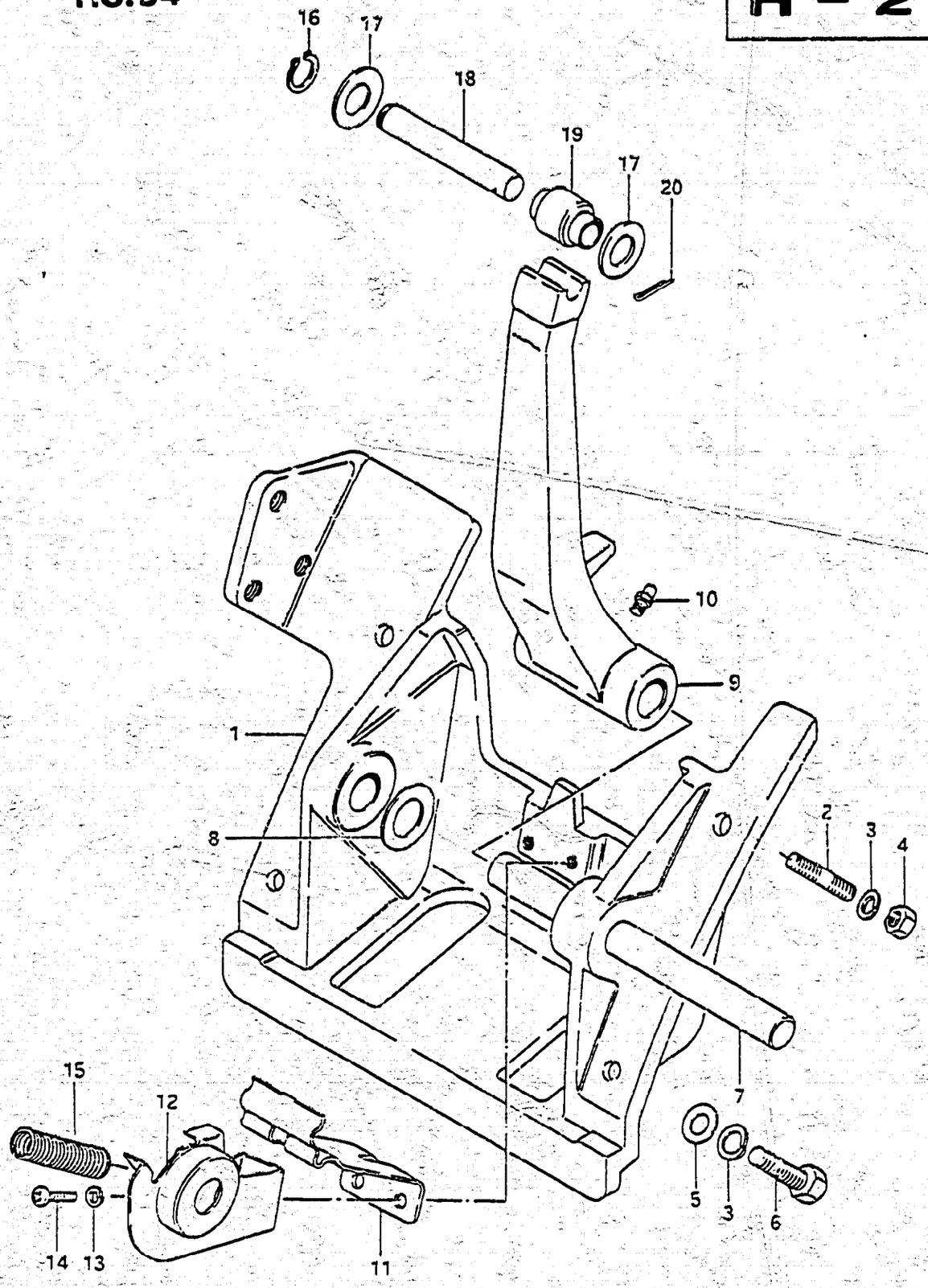

FIG.54 OPT : CYLINDER SUPPORT

Ref. No.	Part No.	Description	Q'ty 50/65	Remarks
1	48111-95501-01J	BRACKET, cylinder support	1	
2	09108-10035	STUD BOLT	2	
3	09162-10002	LOCK WASHER	4	
4	09140-10015	NUT	2	
5	09160-10040	WASHER (10.5x18x1.6)	2	
6	09100-10123	BOLT (10x35)	2	
7	48121-95500	SHAFT, cylinder	1	
8	09160-15026	WASHER (15x30x2)	2	
9-1	48161-95501-01J	ARM, trailering lock	1	
9-2	48161-95502-01J	ARM, trailering lock	1	
10	22511-99000	GREASE NIPPLE	1	
11	48165-95501	STOPPER, lock arm	1	
12	48165-95502	STOPPER, lock arm	1	
13-1	09162-05002	LOCK WASHER	2	
13-2	09162-05002	LOCK WASHER	1	
14-1	09125-05025	SCREW	2	
14-2	09125-05025	SCREW	1	
15	09440-11011	SPRING	1	
16	09380-12002	CIRCLIP	2	
17	48325-95500	SPACER (15.1x30x4)	4	
18	48321-95500	PIN, piston rod	2	
19	09319-12020	BUSHING	2	
20	09204-01002	COTTER PIN	2	

DT50, DT65

FIG.55

H - 3

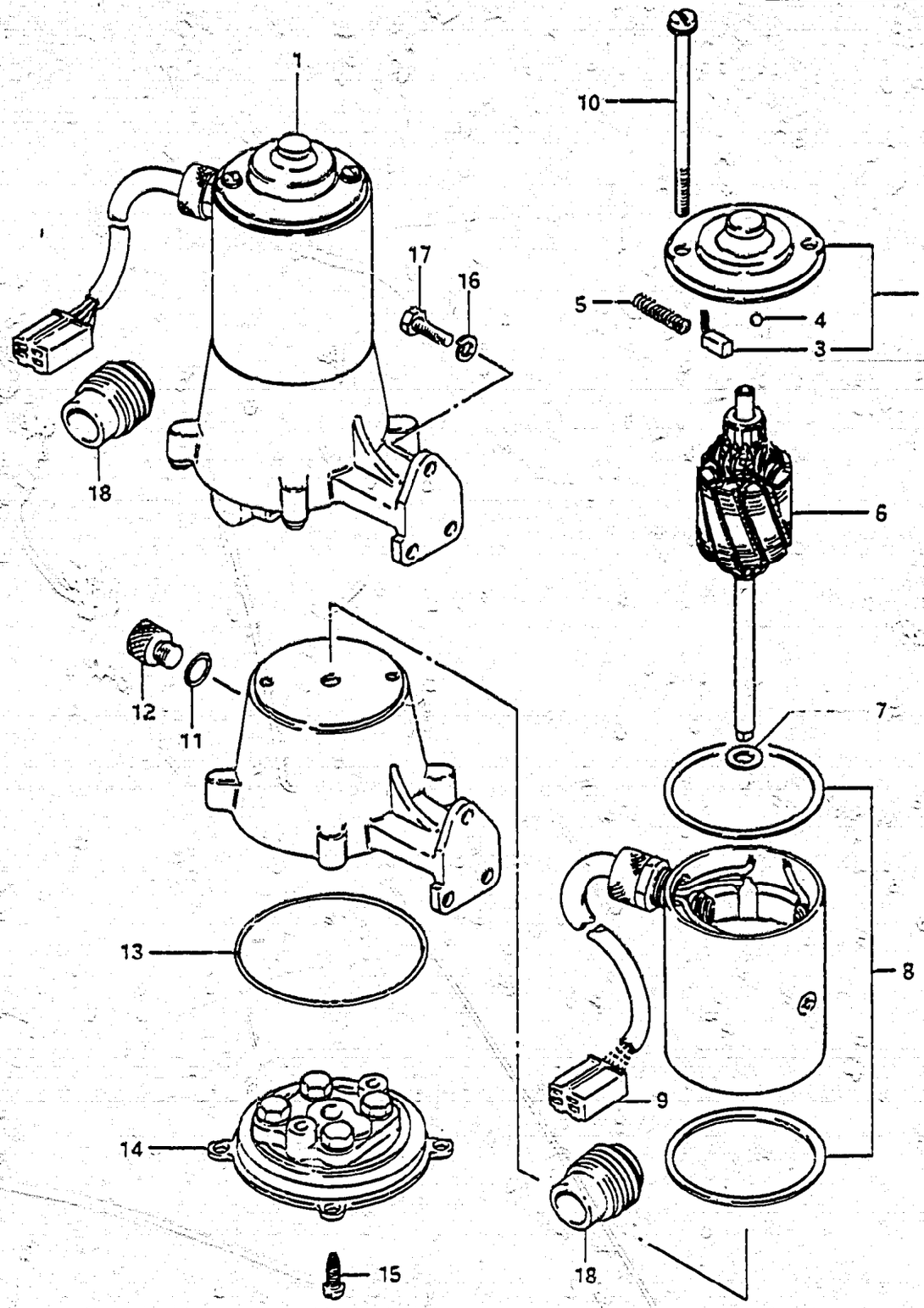

FIG.55 OPT : POWER UNIT

Ref. No.	Part No.	Description	Q'ty 50/65	Remarks
1-1	48500-95500-01J	POWER UNIT, power trim to (48500-95510-01J) + (33836-94501)	1	model G
1-2	48500-95510-01J	POWER UNIT, power trim change 48528-95500 to 33836-94501 when model T (J/VZ).	1	model J/VZ
2	48510-95500	·HEAD ASSY, motor	1	
3	48533-95500	··BRUSH SET	1	
4	06111-05004	·BALL	1	
5	48535-95500	·SPRING SET	1	
6	48540-95500	·ARMATURE	1	
7	48531-95500	·THRUST WASHER SET	1	
8	48537-95500	·GASKET SET	1	
9	48528-95500	·CONNECTOR, harness	1	model G
10	48550-95500	·BOLT SET	1	
11-1	48574-95500	·O RING	1	to 09280-08006
11-2	09280-08006	·O RING	1	
12	48573-95500	·CAP	1	
13	48585-95500	·O RING	1	
14	48502-95500	·VULVE BODY	1	
15	48591-95500	·SCREW	4	
16	09162-08003	LOCK WASHER	3	
17	09100-08154	BOLT (8x22)	3	
18	33836-94501	CAP, motor cable	1	model J/VZ

FIG.56

H - 4

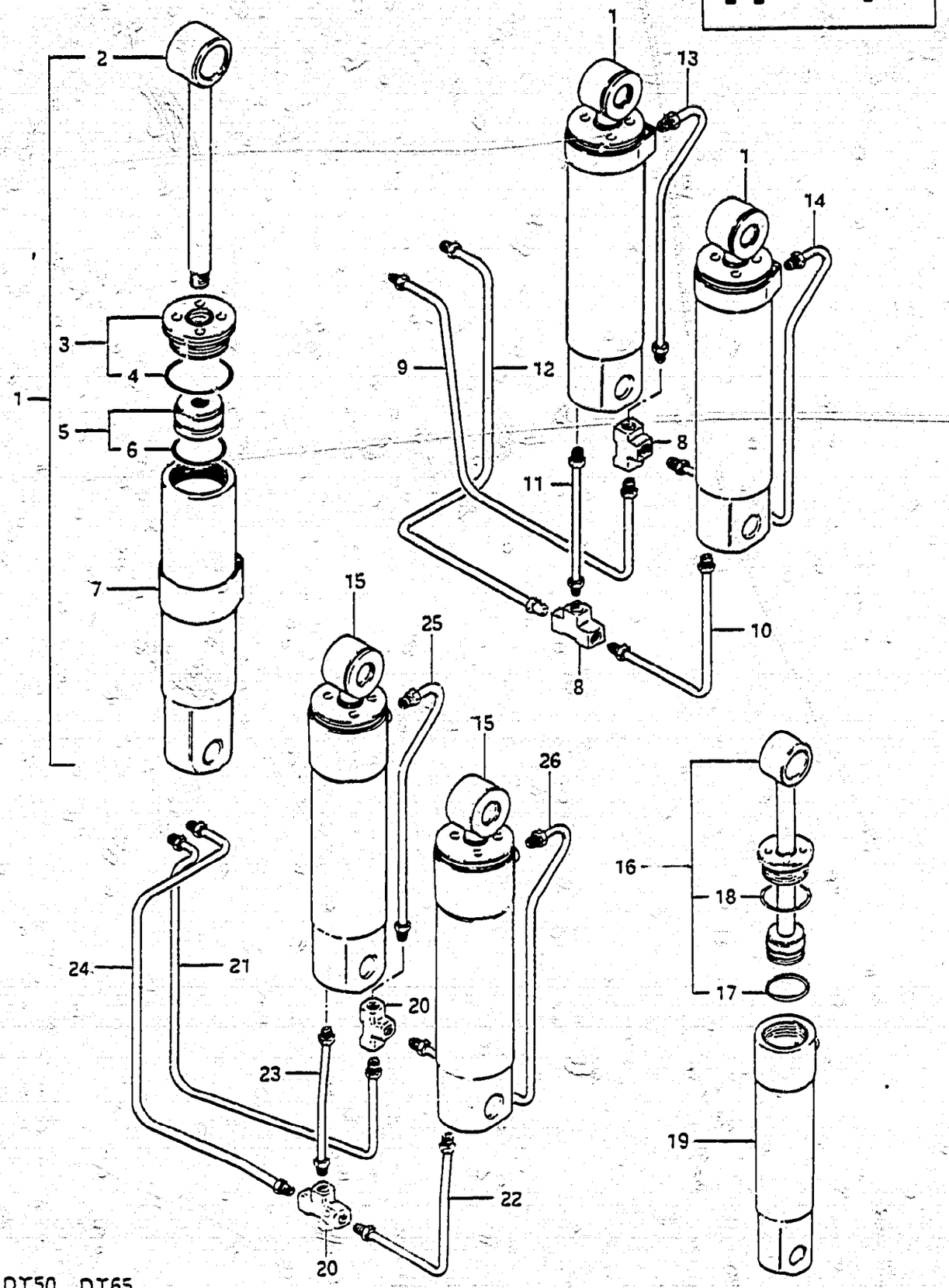

FIG.56 OPT : TRIM CYLINDER

Ref. No.	Part No.	Description	Q'ty 50/65	Remarks
1	48600-95500-01J	TRIM CYLINDER ASSY	2	model G
2	48610-95500	·PISTON ROD	2	to 48711-95510
3	48630-95500	·HEAD ASSY, cylinder	2	to 48760-95510
4	48633-95500	··O RING	2	to 48770-95510
5	48620-95500	·PISTON	2	to 48750-95510
6	48627-95500	··O RING	2	to 48720-95510
7	48670-95500-01J	·BAND, cylinder	2	to 48740-95510
8	48711-95500	CONNECTOR, three way	2	to 48730-95510
9	48721-95500	TUBE (1)	1	
10	48722-95500	TUBE (2)	1	
11	48723-95500	TUBE (3)	1	
12	48724-95500	TUBE (4)	1	
13	48725-95500	TUBE (5)	1	
14	48726-95500	TUBE (6)	1	
15	48600-95510-01J	TRIM CYLINDER ASSY	2	model J/VZ
16	48601-95510	·PISTON	2	
17	48627-95510	·O RING, piston	2	
18	48633-95510	·O RING, head	2	
19	48641-95510	·TUBE, cylinder	2	
20	48711-95510	CONNECTOR, three way	2	
21	48720-95510	TUBE, inlet (1)	1	
22	48730-95510	TUBE, inlet (2)	1	
23	48740-95510	TUBE, inlet (3)	1	
24	48750-95510	TUBE, outlet (1)	1	
25	48760-95510	TUBE, outlet (2)	1	
26	48770-95510	TUBE, outlet (3)	1	

DT50, DT65

FIG.57

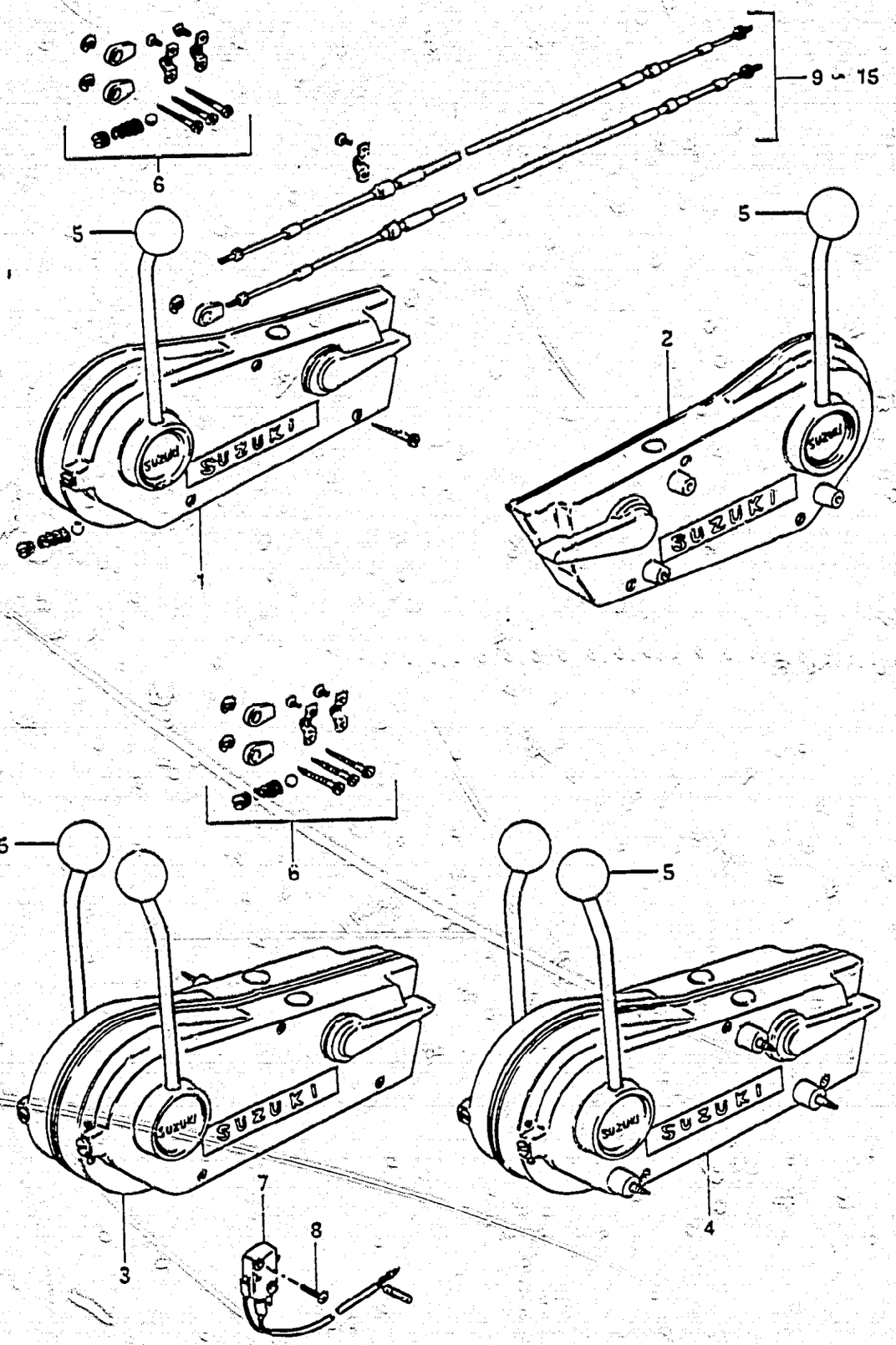

FIG.57 OPT : REMOTE CONTROL (1)

Ref. No.	Part No.	Description	Q'ty 50/65	Remarks
1-1	67200-95201	REMOTE CONTROL BOX (Single RH)	1	to 67200-95202 model G
1-2	67200-95202	REMOTE CONTROL BOX (Single RH)	1	
2-1	67200-95211	REMOTE CONTROL BOX (Single LH)	1	to 67200-95212 model G
2-2	67200-95212	REMOTE CONTROL BOX (Single LH)	1	MORSE
3-1	67200-95221	REMOTE CONTROL BOX (Twin RH)	1	to 67200-95223 model G
3-2	67200-95223	REMOTE CONTROL BOX (Twin RH)	1	
4-1	67200-95231	REMOTE CONTROL BOX (Twin LH)	1	to 67200-95233 model G
4-2	67200-95233	REMOTE CONTROL BOX (Twin LH)	1	
5	67214-95200	·KNOB	1	TWIN···2pcs
6	67300-95810	·HOLDER SET, cable	1	
7	37721-95500	·SWITCH ASSY, neutral	2	Inner parts of 67200-95223~,67200-95233~.
8	02112-03128	·SCREW	4	
9	67320-95750	CABLE ASSY, control	2	L:2500
10	67320-95740	CABLE ASSY, control	2	L:3000
11	67320-95730	CABLE ASSY, control	2	L:3500
12	67320-95720	CABLE ASSY, control	2	L:4000
13	67320-95710	CABLE ASSY, control	2	L:4500
14	67320-95200	CABLE ASSY, control	2	L:5000
15	67320-95760	CABLE ASSY, control	2	L:6000

DT50, DT65

FIG.58

H - 6

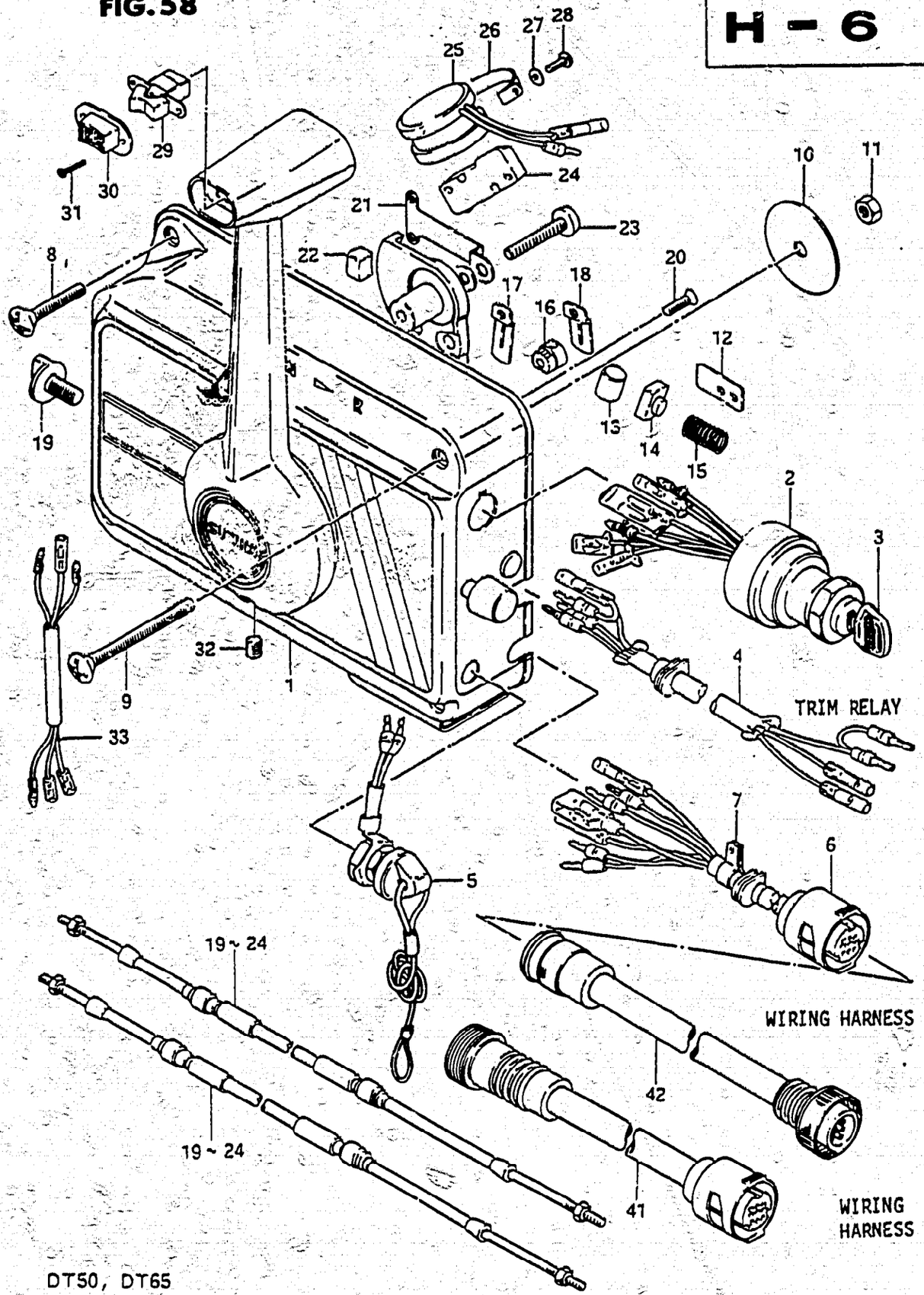

DT50, DT65

FIG.58 OPT : REMOTE CONTROL (2)

Ref. No.	Part No.	Description	Q'ty 50/65	Remarks
1	67200-95502-01T	REMOTE CONTROL BOX	1	NHK-MORSE
2	37110-94300	·SWITCH ASSY, ignition	1	
3-1	37141-93300	··KEY, spare (8511)	1	
3-2	37141-93310	··KEY, spare (8512)	1	
3-3	37141-93320	··KET, spare (8513)	1	
3-4	37141-93330	··KEY, spare (8611)	1	
3-5	37141-93340	··KEY, spare (8612)	1	
3-6	37141-93350	··KEY, spare (8613)	1	
4	36640-95500	·CABLE ASSY, trim relay	1	L:5000
5	37820-95253	·SWITCH ASSY, emergency	1	
6	36620-94500	·WIRING HARNESS	1	L:5000
7	36632-95501	·CLAMP	2	
8	02132-06408	·SCREW	1	
9	02132-06758	·SCREW	3	
10	09160-06047	·WASHER (6.5x22x2)	4	
11	08310-11068	·NUT	4	
12	67271-95500	·PLATE	2	
13	67253-95500	·ROLLER	1	model VZ
14	67254-95500	·BUSHING	1	
15	67255-95500	·SPRING	1	
16	67275-95500	·TRUMMION	2	
17	67272-95500	·RETAINER, clutch	1	
18	67274-95500	·RETAINER, clutch	1	
19	67232-95500	·KNOB, brake	1	
20	02122-04128	·SCREW	4	
21	67233-95500	·RETAINER	1	
22	67234-95500	·SHOE, friction	1	
23	02112-06358	·SCREW	1	
24	37721-95551	·SWITCH ASSY, neutral	1	
25	38500-95502	·BUZZER ASSY, warning	1	
26	38501-95500	·BAND	1	
27	08323-31058	·LOCK WASHER	1	
28	02112-05088	·SCREW	1	
29	37860-95552	·SWITCH ASSY, trim	1	
30	37864-95500	·CAP, switch	1	
31	09139-02003	·SCREW	2	

DT50, DT65

FIG.58

H - 7

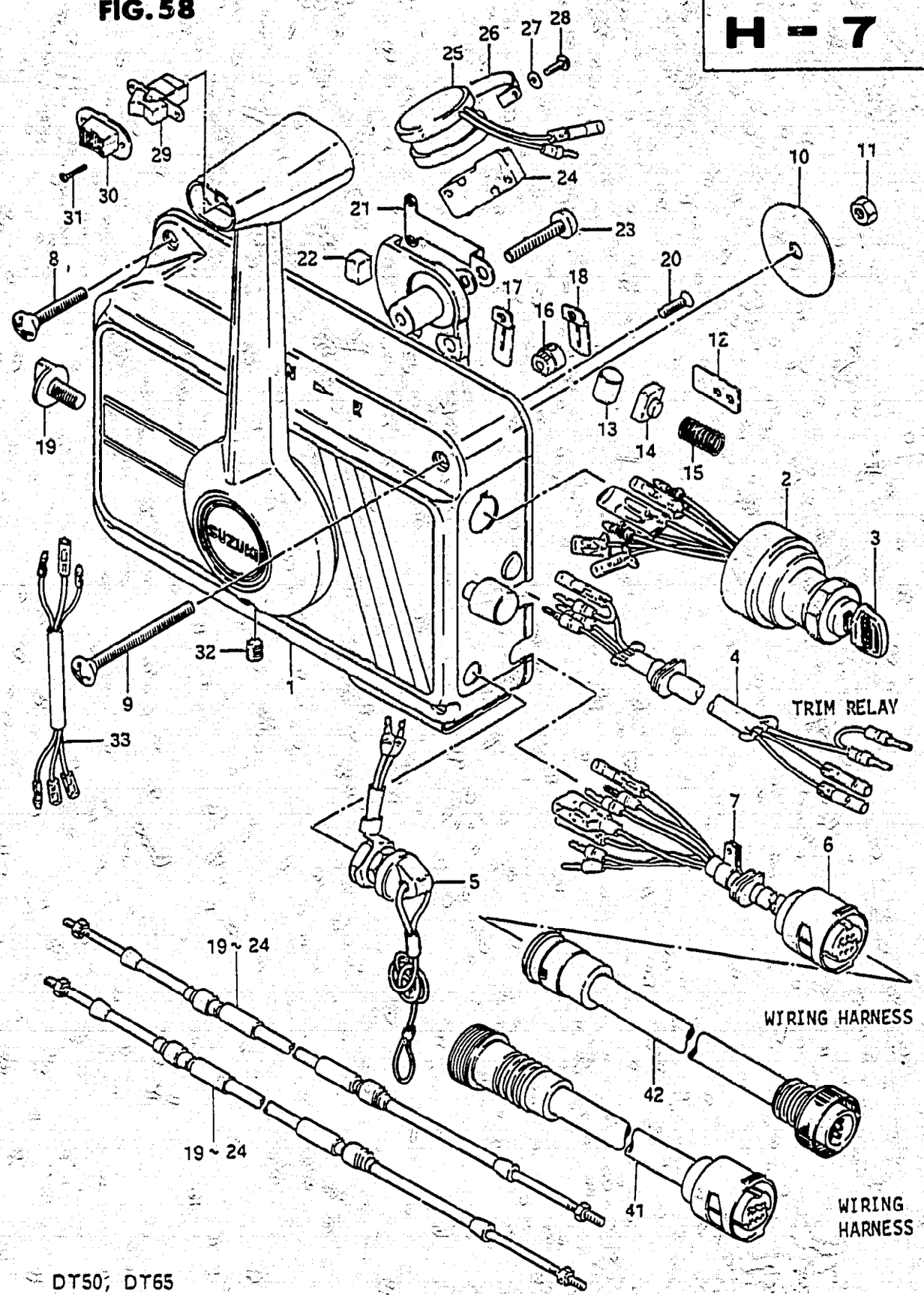

DT50, DT65

FIG.58 OPT : REMOTE CONTROL (2)

Ref. No.	Part No.	Description	Q'ty 50/65	Remarks
32	67249-95500	•SCREW	1	
33	37863-95500	•WIRE ASSY, trim	1	model VZ
34	67320-95750	CABLE, remote control	2	L:2500
35	67320-95740	CABLE, remote control	2	L:3000
36	67320-95730	CABLE, remote control	2	L:3500
37	67320-95720	CABLE, remote control	2	L:4000
38	67320-95710	CABLE, remote control	2	L:4500
39	67320-95200	CABLE, remote control	2	L:5000
40	67320-95760	CABLE, remote control	2	L:6000
41	36641-94700	ADAPTOR (O.N) (OLD CONNECTOR → NEW CONNECTOR)	1	
42	36642-94700	ADAPTOR (N.O) (NEW CONNECTOR → OLD CONNECTOR)	1	

DT50, DT65

FIG.59

H - 8

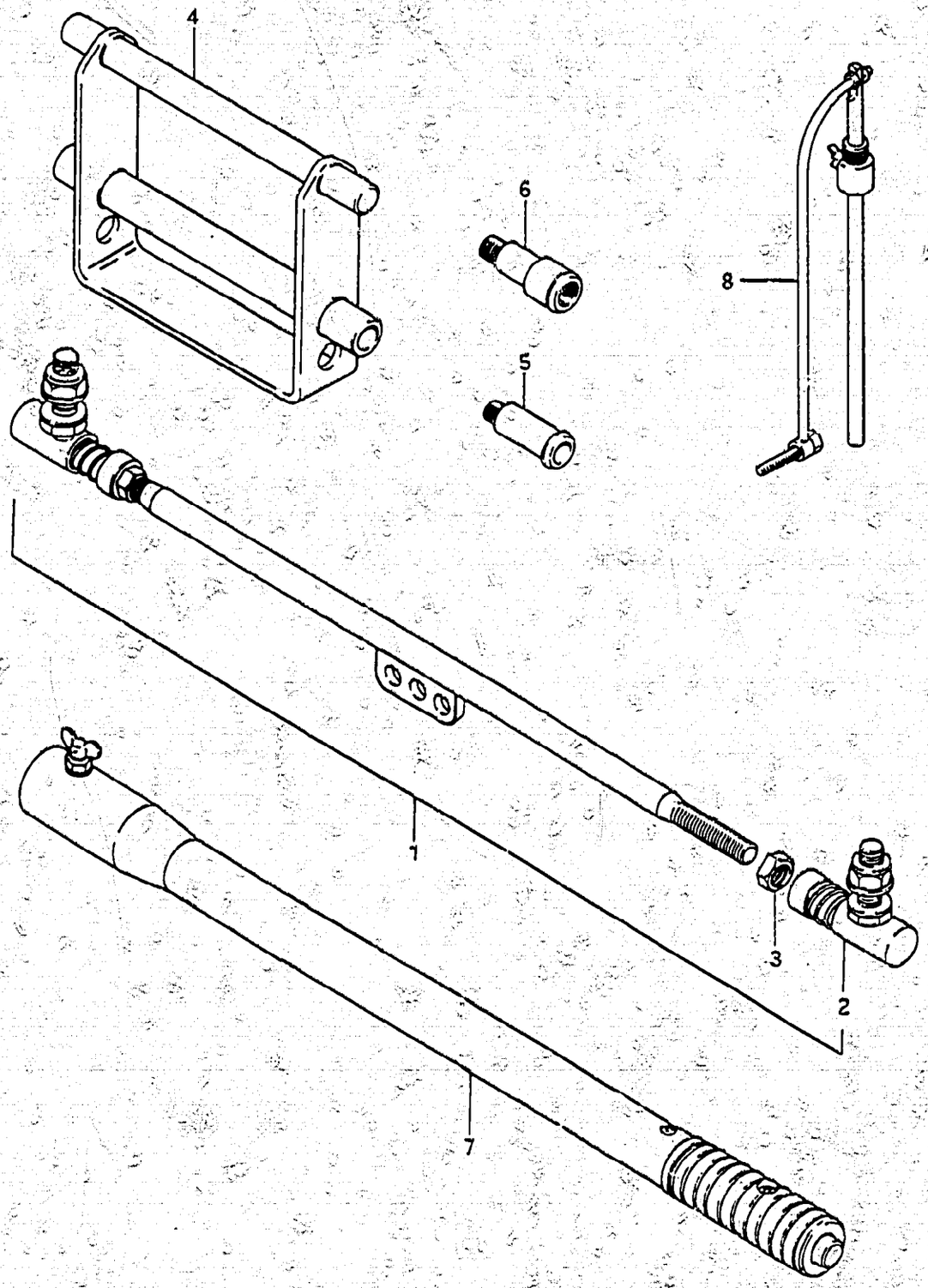

FIG.59 OPT : TIE ROD

Ref. No.	Part No.	Description	Q'ty 50/65	Remarks
1	67600-95200	TIE ROD ASSY	1	
2	83450-93720	·BALL JOINT	2	
3	09140-12020	·NUT	2	
4	45490-95200	SHAFT, trailing attachment	1	
5	55181-95200	ATTACHMENT, flash hose	1	
6	55182-95200	ATTACHMENT, flash hose	1	DT50/DT65G E3 DT65J/VZ E28
7	63300-94300	BAR, extension DT50MVZ (E1,E7,E13,E28,E40)	1	
8	43770-95201	ADJUSTOR, steering	1	

DT50, DT65

FIG.60

H - 9

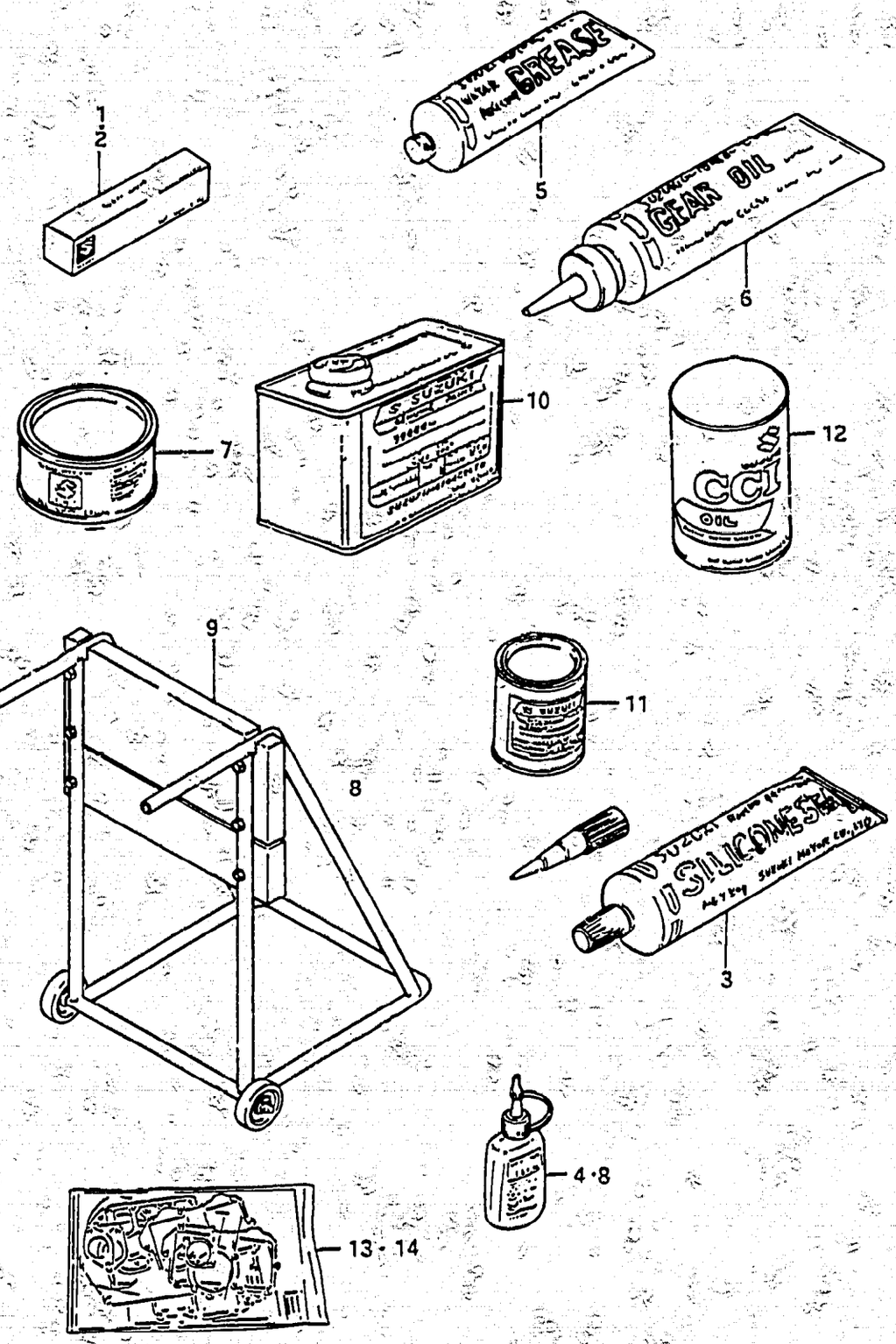

FIG.60 OPTIONAL

Ref. No.	Part No.	Description	Q'ty 50	Q'ty 65	Remarks
1	99000-31030	GASKET, liquid	1	1	for crankcase,100g
2	99000-31050	GASKET, liquid	1	1	for gear case,100g
3	99000-31120	SILICONE SEAL	1	1	50g
4	99000-32050	THREAD LOCK	1	1	50g (1342)
5-1	99000-25160	GREASE, water resistant	1	1	250g
5-2	99000-25170	GREASE, water resistant	1	1	50g
6	99000-22540	GEAR OIL, outboard motor	1	1	400cc
7	99000-25010	SUZUKI SUPER GREASE A	1	1	450g,for crank oil seal
8	99000-32020	THREAD LOCK SUPER	1	1	50g (1333B)
9	09914-39941	HANGER, engine	1	1	
10-1	99000-10105-01T	PAINT (500g)	1	1	
10-2	99000-10205-01J	PAINT (500g)	1	1	
11-1	99000-10109-01T	PAINT (90g)	1	1	
11-2	99000-10209-01J	PAINT (90g)	1	1	
12-1	99000-21460	CCI OIL (1ℓx24,MITSUBISHI)	1	1	
12-2	99000-21145	CCI OIL (1ℓx24,SHELL)	1	1	
12-3	99000-21021	CCI OIL (4ℓx6)	1	1	
12-4	99000-21150	CCI OIL (200ℓ)	1	1	
12-5	99000-21250	CCI SUPER OIL (1ℓx24)	1	1	
12-6	99000-21260	CCI SUPER OIL (4ℓx6)	1	1	
13-1	11400-95862	GASKET SET (ENGINE)	1	-	to 11400-95863
13-2	11400-95863	GASKET SET (ALL)	1	-	
13-3	11400-95864	GASKET SET (ALL)	1	-	
13-4	11400-95866	GASKET SET (ALL)	1	-	
14-1	11400-95871	GASKET SET (ENGINE)	-	1	to 11400-95872
14-2	11400-95872	GASKET SET (ENGINE)	-	1	
14-3	11400-95873	GASKET SET (ALL)	-	1	
14-4	11400-95874	GASKET SET (ALL)	-	1	
14-5	11400-95876	GASKET SET (ALL)	-	1	

DT50, DT65